NO. 33 NOTES FROM THE SHOP

Woodsmith®

MODULAR Wall-Unit

7 53543 00033 3

Woodsmith®

Number 33 May/Jun, 1984

Editor
Donald B. Peschke
Design Director
Ted Kralicek
Assistant Editor
Steve Krohmer
Art Director
Kay Mulder
Technical Illustrators
David Kreyling
Mike Henry
Subscription Manager
Sandy J. Baum
Subscription Assistants
Christel Miner
Vicky Robinson
Jackie Stroud
Shirley Feltman
Ann Williams
Computer Operations
Ken Miner
Circulation Manager
Jeff Farris
Administrative Assistant
Cheryl Scott
Building Maintenance
Archie Krause

WOODSMITH (ISSN 0164-4114) is published bimonthly (January, March, May, July, September, November) by Woodsmith Publishing Co., 2200 Grand Ave., Des Moines, Iowa 50312.
WOODSMITH is a registered trademark of the Woodsmith Publishing Co.
©**Copyright 1984** by Woodsmith Publishing Co. All Rights Reserved.

Sawdust

ABOUT THIS ISSUE. Whenever we sit down to plan an issue of *Woodsmith*, we have high hopes of showing a lot of projects and all the techniques it takes to build them.

It stands to reason that the more projects we show in an issue the more likely one will catch someone's fancy. And we're well on the way to pleasing everybody.

But it never works out that way. And the truth is, that kind of approach is very limiting. The more things we show, the less space we have to show them in. So we wind up with a "more is less" issue. I'd much rather take the space required to show as many of the details as we can for building a project.

All of this is my way of saying: In this issue we have one big project and we've taken half the issue to show how to build it. The project is a modular wall unit that has several interchangeable components.

These modular storage systems are a relatively new kind of furniture. It's furniture that works for you instead of restricting you. Most storage furniture (like a bookcase, dresser, or hutch) permits a certain amount of space, and it's up to you to make what you have to store fit the space.

But the modular nature of these new systems means the furniture can be changed to meet your needs. The flexibility of each wall unit is the result of having several components that can be interchanged — that is, moved around to change the overall function of each unit.

At the same time, each component is itself very flexible. The shelves, for example, can be changed to serve as display racks. The base cabinets are designed to have either doors or drawers. And the fall-front cabinet can be used for storage or as a desk.

With all this flexibility you'd expect it to be a difficult project to build. Just the opposite is true. Only one joint (a tongue and groove) is used to build the frames and all of the components.

That's what made this project so interesting to build. What looks complicated is actually quite simple. As I was working on each component, it seemed small and certainly manageable. But when all the components are assembled, it becomes quite a large project with many possible arrangements. That's why it took us 10 pages to show just how simple this project is.

HARDWARE. I'd like to mention something about the hardware we used on the wall unit. One of the biggest problems with designing a project is finding the right hardware. We spend a lot of time looking through catalogs because very often finding a particular piece of hardware will have a strong influence on the way a project is designed.

For example, to mount the glass doors on the upper "hutch" cabinets of the wall unit, we used a special pivot hinge. These hinges are attached directly to the glass — so you don't have to build a frame around the glass just for the hinges.

That certainly had an effect on the design — and gives the overall appearance of the cabinet a much cleaner look.

CUT TO FIT. We've made a point of including a Materials List with almost every project to show the final dimensions of each piece used to build the project.

As we were putting together the rather extensive Materials List for the wall unit, I began to think about the accuracy of all the dimensions we were showing.

"You know," I thought to myself, "I'm checking all of these numbers to make sure all the dimensions listed here are as accurate as possible. Yet I know I didn't use any of these dimensions to build the project."

Now I don't mean I just made up a bunch of numbers to put in the Materials List and used the "right" ones to build the project. I mean that every dimension given in the Materials List is subject to change. It's a matter of cut to fit.

If you use a ruler to make a cut, you can only get so close — maybe within 1/32". But if you're off 1/32" on several cuts, all of a sudden a lot of dimensions start changing. That's when you should forget the Materials List and *cut to fit*.

This is really one of the fundamentals of woodworking. You've heard the phrase, "Measure twice, cut once." Well, it's a nice phrase, but to get the best accuracy you have to go a step beyond that.

It's more a matter of cutting twice and checking the fit. That doesn't have the ring of a phrase to remember, but it will yield better results.

Put the ruler away and make multiple cuts to "sneak up" on the fit. If you're cutting a tongue and groove joint, for example, the fit of the groove on the tongue is more a matter of touch than measurement.

The difference between a "nice friction fit" and a "loose and sloppy fit" is probably only a few thousandths of an inch. This is very difficult to measure. But it is possible to "sneak up" on this kind of cut, and *feel* the fit of the pieces as they go together. Then you know you're right on the money. And that's woodworking at its best.

Tips & Techniques

DOWEL CENTERS

Have you ever tried to drill a hole perfectly centered on the end of a dowel? Just eyeing it never produces very good results, so I use a simple jig to mark the center point on the end of a dowel that only requires a piece of scrap wood and a set of Stanley Power Bore bits.

First, I select a drill bit that has the same outside diameter as the dowel I'll be

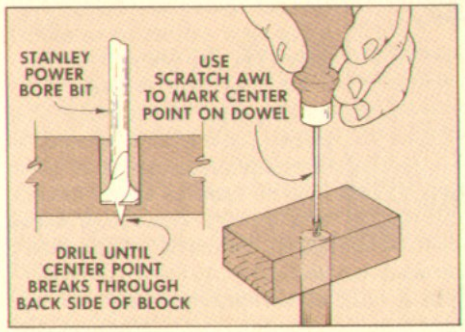

drilling. Then I drill a hole in a block of wood so the tip of the bit just barely pokes through the back side of the block.

To use the jig, simply place it over the end of the dowel, and poke a scratch awl through the hole left by the point of the drill bit. This produces an accurate dowel center every time.

Jim Yoghourtjian
Racine, Wisconsin

SANDING A HOLLOW GROUND EDGE

I just couldn't let the opportunity go by without adding my 2¢ worth to the subject of sharpening tools on a sander as described in *Woodsmith* No. 31.

I've used a similar method for a long time, with one exception. I use the *belt* on my stationary belt/disc sander to achieve a beautiful hollow-ground edge on any tool. And since chisels are sharpened at 30°, and plane irons at 25°, I built the tool rest with a 25° angle on the right half, and a 30° angle on the left half.

It should be noted that the tool rest shown here is designed for the Sears stationary belt/disc sander. The method shown for attaching the rest to the sander may vary slightly for other machines. However, the basic design of the rest itself can be retained, regardless of the brand of sander being used.

The rest should be attached to the end of the sander that rotates in the direction shown so the belt doesn't lift the tool off the rest. Also, with the belt rotating in this direction, any heat produced is drawn away from the edge of the tool.

To attach the tool rest to the sander, a ¾" dowel is inserted into the hole used for attaching the auxiliary table. Then a 2" x 6" support block is mounted to the other end of the dowel to provide vertical support for the tool rest.

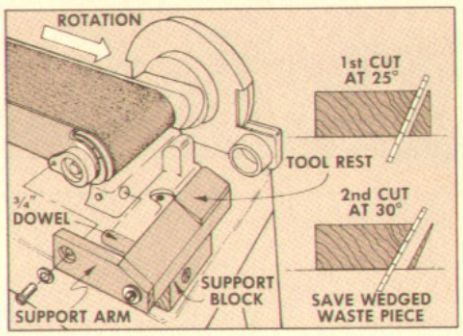

The tool rest itself is cut from 1½" thick stock, 4" to 5" wide and 8" long. To produce the double bevel (25° and 30°) on the top edge of the tool rest, I used an old trick I learned a long time ago.

First, rip a 25° bevel on the top edge of the tool rest. Then make a second cut at 30° on the same edge, completely removing the first bevel. This second cut must be positioned so the waste piece forms a sharp wedge, see drawing.

The key to this system is saving the sharp wedge. What I do is trim this wedged piece so that it's 4" long, or half the width of the tool rest. Then this piece is glued on one end of the 30° beveled face of the tool rest to produce a surface with a 25° angle, see drawing.

The next step is to determine the correct height of the rest. First, position it on top

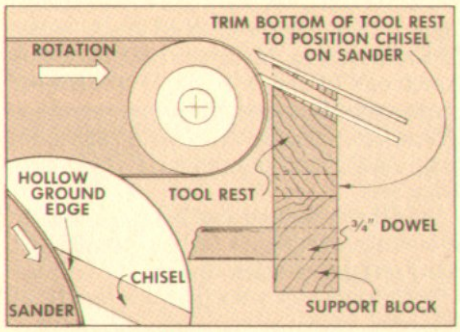

of the support block, ⅛" away from the end of the sander. Use a chisel or plane iron (sharpened to the correct angle) as a guide to set the height of the beveled edge of the tool rest. Then gradually trim off the bottom edge of the tool rest until the beveled edge is positioned correctly on the sander.

When the tool rest is trimmed to the correct height, glue it to the support arm so that it's parallel to, and ⅛" from the end of the sanding belt. Then attach a support arm to the end of the tool rest and the frame of the sander for horizontal support.

George Kemmitz
Sun City, Arizona

Editor's Note: We tried Mr. Kemmitz's grinding system (using fine grit aluminum oxide belts), and it worked very well. The beveled edge was very consistent and it remained relatively cool as it was ground (sanded).

The sander also produces a very deep hollow ground bevel due to the small radius on the end of the sander. This reduces the amount of "meat" at the edge slightly, but not enough to make a significant difference.

PLASTIC LAMINATES

Whenever I'm cutting plastic laminates on the table saw, as for the trestle desk in *Woodsmith* No. 31, the plastic laminate is constantly sliding underneath the wood face on my rip fence. To prevent this, I use a plywood jig that's made with a 1½" wide piece of plastic laminate.

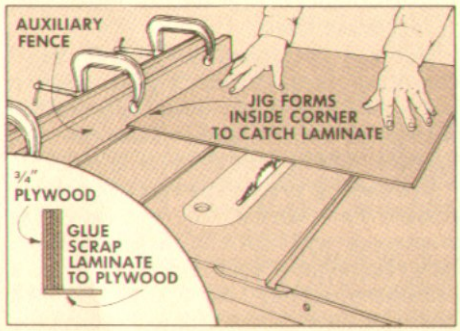

First I attach the narrow strip of plastic laminate to the bottom edge of a 3" x 24" piece of plywood. Then the plywood jig is clamped to the rip fence on the table saw so the laminate is resting on top of the table. The jig creates a ledge that catches the edge of the plastic laminate being cut, and prevents it from falling below the fence.

Jim Jacobs
Hastings, Minnesota

SEND IN YOUR IDEAS

If you'd like to share a woodworking tip with other readers of *Woodsmith*, send your idea to: *Woodsmith*, Tips & Techniques, 2200 Grand Ave., Des Moines, Iowa 50312.

We pay a minimum of $10 for tips, and $15 or more for special techniques (that are accepted for publication). Please give a complete explanation of your idea. If a sketch is needed, send it along; we'll draw a new one.

Sandpaper

JUST SCRATCHING THE SURFACE

I've done it! I've finally found a way to clear everyone out of the shop so I can have some peace and quiet. All I have to do is ask, "Does anyone want to help sand this project?" Suddenly, the shop clears and nobody returns for at least a week.

Actually this reaction isn't a big surprise. For me (and every other woodworker I know), sanding a project ranks right up there with sending in your taxes. (It's just one of those things that has to be done, and done right . . . or you'll end up paying in the end.)

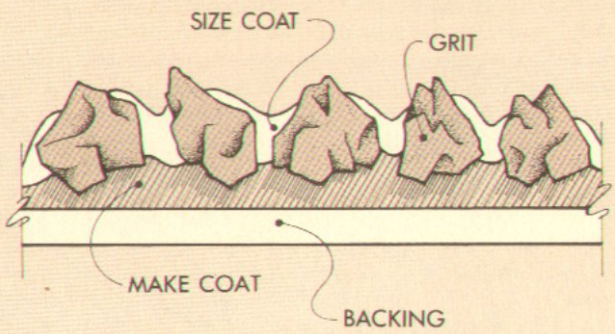

ENLARGED CROSS-SECTION OF SANDPAPER

The problem is that if the proper materials and procedures aren't used for sanding a project, the flawed results will show no matter how carefully you apply the finish coats. It's really no different than slopping on the first coat of finish, and hoping to "cover it up" with the next coat. It just won't work.

But why even sand in the first place? One of the reasons for sanding is to create a *consistent* texture across the surface of the workpiece, which in turn produces an even appearance when the finish is applied.

The sanding process creates a consistent texture by scratching the surface of the workpiece with specific size abrasives. However, even when the workpiece has a consistent texture, it has to be sanded with finer and finer grades of mineral until the scratch pattern is so small that it will no longer be visible when the finish is applied.

But how much sanding is really needed? After all, the last thing I want to do is sand more than I need to. Yet at the same time, I don't want to be finishing the project, only to find out that the sanding marks show through. So where do you draw the line?

To find the answers to our questions on sanding, and sandpaper in particular, we talked to Kirk Graves and Tom Eckstein at 3M, and Ralph Herron at Norton.

According to both 3M and Norton, one of the first problems most people face when using sandpaper is deciding *which* product to use. The key to choosing the correct product is to match its characteristics with the requirements of the job at hand.

This process starts by choosing the correct "sand" — the correct abrasive mineral. This is the one component of sandpaper that has the greatest influence on overall performance.

The abrasive minerals used in modern sandpaper are classified in two main categories: naturally mined minerals and synthetically manufactured minerals.

THE NATURAL MINERALS

Sandpaper first came into common use around the turn of the century, and was a result of the needs of the woodworking and the growing automobile industries. (All those different colored Black Model T's needed to be sanded.) The only abrasive minerals that were being used for sandpaper during this period were flint and garnet, two naturally occurring minerals that were readily available.

FLINT. One of the sandpapers your great grandfather used was probably coated with flint abrasive. Flint is a white colored, light wedge shaped mineral that's mined in South Dakota. However, both the knoop hardness and the relative toughness values for flint are quite low, see Box. These figures mean that flint breaks down very easily, and doesn't hold its cutting edge well.

About the only reason flint is used today is because everyone's father, grandfather, and great grandfather used it. But because of its extremely poor performance, and minimal price advantage, everyone I talked to recommended using another mineral if at all possible.

GARNET. Garnet is the other naturally mined mineral, and is mined in upper New York state. Garnet is an orangish-red color, and has a light wedge shape similar to flint. But that's where the similarity ends.

Both the knoop hardness and the relative toughness values for garnet are much higher than for flint. It's the combination of these values and the sharp-pointed wedge shape of the mineral that make garnet an ideal mineral for sanding wood.

One characteristic of garnet that makes it attractive to woodworkers is that it always feels "sharp," even after it's been used. The reason for this is that garnet fractures or breaks off as it's used, creating new (although smaller) sharp cutting points.

This is one reason why many people believe that as a piece of sandpaper is used, it becomes a finer and finer grit. This is true to some extent with garnet. But the problem is that the cutting points don't break down uniformly, so some of the mineral is still at its original size, and will continue to scratch the surface at the coarser grit size.

One of the best applications for garnet is sanding end grain. Because of its sharp cutting action, garnet tends to cut off rather than plow through the tough end grain fibers to produce a clean cut. This cutting action is similar to using a very sharp chisel on end grain, whereas most other abrasives cut like a dull chisel.

Although the fracturing characteristic of garnet makes it ideal for hand sanding and sanding end grain, it also makes garnet less durable, and undesirable for most power applications like belt sanding. One notable exception is the new orbital finish sanders (see page 7), which produce very little heat and only a minimal amount of wear and tear.

THE SYNTHETIC MINERALS

Synthetic minerals that are superior to the natural minerals have been around for a long time, but it's only been in the last 30 years or so that they've been used as abrasive minerals for sandpaper. The most common of the "new" synthetic minerals are aluminum oxide and silicon carbide.

ALUMINUM OXIDE. Aluminum oxide ranges in color, depending on its purity, from brown to white. It has a very heavy wedge shape — between blocky and wedgy — that includes a big hefty base.

The knoop hardness and relative toughness figures, combined with its husky shape (in comparison to garnet) show that aluminum oxide is a very hard and very tough mineral. This is why it's considered a general purpose mineral that can be used to sand metal, plastics, and other mate-

rials, including wood.

Probably the biggest difference between garnet and aluminum oxide, other than their hardness, is the way they dull. As garnet dulls, it tends to fracture, creating new cutting points. Aluminum oxide on the other hand, is much more durable and rarely fractures. Instead, its cutting points simply become dull . . . although due to its hardness and toughness, this occurs at a fairly slow rate.

Although aluminum oxide can be used in any wood sanding application, it's commonly associated with power sanding. This is where aluminum oxide's durability is a real advantage, yet its slightly duller (than garnet) cutting edges have little negative effect.

SILICON CARBIDE. The other synthetic material commonly used is silicon carbide, a black colored mineral that's commonly found on waterproof sandpaper. Silicon carbide has a very sharp wedge shape (to the point of forming slivers), a very high knoop hardness, and a relative toughness value that varies from moderate to very tough.

Although silicon carbide is hard and sharp, its pointed wedge shape also makes it very fragile. And when used under pressure, it tends to fracture, producing new cutting edges. This "self-sharpening" characteristic is an advantage when silicon carbide is used to sand paint and finishes, where sharpness is more important than durability.

The very sharp characteristics of silicon carbide make it an excellent choice for sanding the hard woodworking finishes that are available today. And since it's usually produced as waterproof sandpaper, it's also the best choice whenever a lubricant is used during sanding.

But silicon carbide is a poor choice for sanding unfinished wood, where durability is a major requirement. A better choice of mineral would be either garnet or aluminum oxide.

DESCRIPTION OF TERMS

BASIC SHAPE. This shape, along with the knoop hardness and the relative toughness, can be used to determine the kind of cutting action, and characteristics of the mineral.

KNOOP HARDNESS. These figures designate the actual hardness of the mineral, and are determined by measuring how far a diamond probe will penetrate into the mineral.

RELATIVE TOUGHNESS. Relative toughness is determined by measuring how much energy is required to fracture the mineral, and is useful when comparing the toughness of one mineral to another.

GRADING THE MINERAL

After the mineral is manufactured, or mined, it's crushed into fine particles which are classified according to size. The grit size is determined in one of several ways. For grades below 220, the mineral is sorted using a set of sieve screens (called sieve graded), each with a different number of openings per inch. The grit designation, or mesh number (80, 120, 180, etc.) actually equals the number of open-

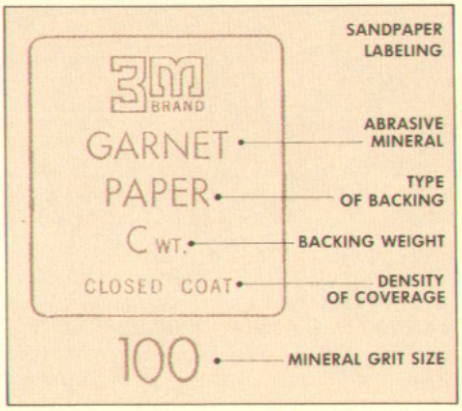

ings per lineal inch in the screen that finally catches the mineral.

Even though a grade of mineral may be given a grit designation, it usually contains a distribution of grits. 120-grit mineral would typically have a distribution ranging from roughly 100 to 140-grit, with the highest concentration at 120-grit.

But there's a point where it becomes difficult to create screens with a very high number of openings per inch. After all, 220-grit mineral requires using a screen with 48,400 openings per square inch.

This is why most minerals finer than 240 grit (which are called flour grains) are classified by air. Using this system, the mineral is sorted by placing it over a column of rising air, and measuring how far it rises above the air inlet. The higher the mineral rises, the finer its grade.

The ultra-fine grits (600-grit and finer) are sorted by means of a water flotation system. This system floats the mineral in water, instead of air, to separate the mineral according to its size.

PURITY. Although the minerals are carefully sized, if you take a close look at the surface of a sheet of sandpaper, you'll see that it's covered with a wide variety of colored impurities.

These trace minerals aren't completely removed because it's too expensive to refine the minerals to 100% purity. Besides, they really don't have a detrimental effect.

THE BACKINGS

Although the abrasive minerals do the actual cutting, there are other variables that affect the performance of abrasive products. In fact, before the mineral can even be used, it must be adhered to some sort of backing.

There are two kinds of backings used for the coated abrasives most woodworkers come in contact with: paper and cloth.

PAPER. Paper is the most common backing, and is used on almost all sandpaper sheet goods. Paper backings come in several different weights, and are designated by letters ranging from A (the lightest) to F (the heaviest). In general, as the weight of the paper increases, it's thicker and more durable, but also less flexible.

A-weight paper (the lightest weight) is used on very fine sandpaper (usually 120-grit and finer) where flexibility is often needed. C-weight and D-weight papers are used on coarse grits (usually 100-grit and coarser), and are heavier and stronger than A-weight paper. They're also less flexible, which makes them a good choice for use with power sanders.

CLOTH. Cloth is the second most common backing found on the retail market. Usually cloth backings are used on sanding belts, where flexibility, strength, and tear resistance are needed.

Most cloth backings are cotton, but they

MINERAL NAME	FLINT	GARNET	ALUMINUM OXIDE	SILICON CARBIDE
BASIC SHAPE	Light Wedge	Light Wedge	Heavy Wedge	Sharp Wedge
COLOR	Whiteish	Orangish Red	Brown-To White	Black
SOURCE	South Dakota	New York	Manmade	Manmade
KNOOP HARDNESS	820	1360	2100	2480
RELATIVE TOUGHNESS	.39	.65	.8 to 1.2	.7 to 1.1
SANDING USES	None	Wood	Wood, Metal Paint, Misc.	Finishes, Paint

can also be rayon, polyester, or a combination. Cloth backings are often woven with special patterns to deliver the strength in the direction needed. Sanding belts for example, are woven to resist stretching in length.

Cloth is also classified by weight, with J-weight (called Jeans) being the lightest and most flexible weight. X-weight (or Drills) is a heavier and stronger weight of cloth, and is the most commonly used backing for sanding belts.

THE ADHESIVE COATS

Getting all of the individual grains of mineral securely attached to the backing is no easy chore. In fact it actually takes two separate layers of adhesives to do the job.

The first layer of adhesive, called the make coat, is applied directly to the backing. (The backing itself is often treated to ensure even penetration of the adhesive, to reduce its water sensitivity, and to prevent curling). The make coat creates a bed to hold the mineral as it's deposited.

ELECTROSTATIC COATING. The most common method of applying mineral is electrostatic coating. An electrostatic charge is created around the backing that causes the oppositely charged mineral to actually jump up and embed itself in the make coat on the backing. This process also arranges the minerals so their points are exposed.

DROP COATING. On the very largest grade minerals, the size of each particle is so large, it can cut no matter how it's positioned. In these grades, the mineral is simply dropped on the backing (called drop coating) at a specific rate to achieve the desired coverage.

DENSITY. The mineral can also be applied at different densities, which are classified as either open coat or closed coat. Open coated abrasives have mineral covering 50%-70% of the backing, whereas on a close coated abrasive, the mineral will cover 95% to 100% of the backing. Usually the density of the mineral has been predetermined by the manufacturer, and rarely is a choice even available.

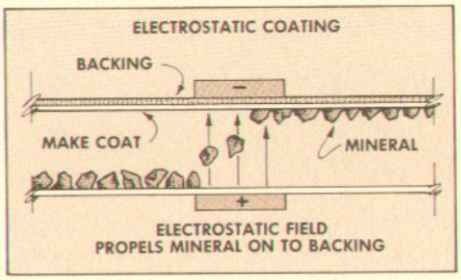

But as a general rule, the coarser grades are open coat to improve self cleaning and prevent loading up, and the finer grades are closed coat to provide more cutting points per inch, and to produce a finer finish. (A typical example of closed coat coverage would be 320-grit silicon carbide sandpaper, which has over 400,000 grains of mineral per square inch.)

SIZE COAT. After the mineral is embedded in the make coat, a second coat of adhesive, called the size coat is applied to hold the mineral in place. The thickness of the size coat is critical because it can't be allowed to cover the mineral completely, yet it has to be thick enough to go around the sides of the mineral and hold it in place.

There are two general groups of adhesives that can be used for the make and size coats: animal hide based glues, and synthetic resins.

GLUE. Glue adhesives are a modern version of an old woodworking glue — animal hide glue. The advantages to using glue based adhesive include their flexibility, price, and flowing characteristics (they don't cover the tips of the mineral). Glue adhesives are the most commonly used adhesive on sheet sandpaper that's found on the retail market.

SYNTHETIC RESINS. Most of the synthetic resin systems being used today are either phenolic or urea based resins, which are stronger than glue adhesives, and also heat and water resistant (some are even waterproof).

One of the disadvantages to synthetic resins is that they tend to cover the peaks of the mineral, making the coated abrasive act as if its slightly "dull" until the adhesive wears off the peaks. Another drawback to using resins is their lack of flexibility, which must be artificially created by breaking or "flexing" the adhesive after it's cured.

Once the size coat is applied, the product is heated to cure both coats of adhesive. Then the coated abrasive is rolled flat, and kept in a temperature and humidity controlled environment to prevent it from becoming excessively dry. At this point, the coated abrasives are cut to the particular product size and packaged for shipment.

Editor's Note: I'd like to express a special appreciation to both Kirk Graves and Tom Eckstein of 3M for their enthusiastic cooperation in researching this article. Although it's hard to believe anyone can get excited about sandpaper, these two gentlemen did, and they made writing this article easy.

SHOP NOTES . . .

At the beginning of this article, I mentioned not wanting to sand more than needed, yet enough to properly prepare the surface for finishing. So what procedures should be followed?

The first thing to do is decide what kind of mineral is the most appropriate to use. Around our shop, we use either garnet or aluminum oxide. As to which of these two minerals is "best," it's pretty much a toss-up for most applications that involve hand sanding or using an orbital sander.

We all agree that flint isn't worth messing with (it just doesn't hold up), and silicon carbide is reserved for sanding finishes (varnish, urethane, and shellac).

After deciding on a mineral, the next step is to determine what size grit to start with. For hand sanding or when using an orbital sander, I start with 100-grit. If anything coarser is needed, then I'm usually better off switching procedures. That is, switch to a cabinet scraper, a hand plane or a belt sander.

When sanding around curves or on lathe turnings, I flex the sandpaper first by drawing over the edge of a table or bench. This creates micro-fractures in the adhesive, increasing its flexibility, and reducing the chance of shelling (when the mineral pops off).

As I'm sanding, I've found it helps a great deal to set up a light just above the worksurface. With the light reflecting at a low angle, it's much easier to see inconsistencies and scratches on the surface, and catch them before the finish goes on. Using this light also means that I can see when to stop sanding, instead of just stopping when my arm gets tired.

How many grits can be skipped? As a general rule, we never skip more than two grits. If I start with 100-grit, the biggest jump would be to 180-grit (skipping 120, and 150 grits). In most cases, I only skip one grit, going from 100-grit to 150, and finishing with 180 or 220-grit.

How fine should a project be sanded? Although some people sand unfinished wood with 400-grit, we've found (and 3M and Norton both agree) that sanding beyond 180-grit is rarely needed, and can actually do more harm than good.

When very fine sandpaper is used, the sawdust is so fine it can fill the pores of the wood, and limit penetration of certain finishes such as penetrating oils.

For open grained woods (like oak) that don't show many scratches anyway, 150-grit is usually fine enough for the final sanding, especially if an oil finish is going to be used. For most other woods, 180-grit is often used for the final passes, and only rarely is 220 needed.

But no matter what size grit you use, the most important rule in sanding, a rule to be followed at all cost, is simply this: Sanding is too much work. Get someone else to do it.

Tools of the Trade

PALM SANDERS: WHICH ONE TO CHOOSE?

As far as I'm concerned, there are only two ways to sand a project. Number one: get someone else to do it. But if I have to sand it myself, I use a palm finish sander to reduce the drudgery.

Unlike the old dual action sanders, palm sanders don't leave more scratches than they remove. In fact, their high speed (10-12,000 Orbits Per Minute) and very small orbital diameter (as small as 5/64") allow them to leave virtually no visible scratches on the surface.

Since we use palm sanders for the majority of our sanding, we decided to take a closer look at the three most common models: the Porter-Cable Speed-Bloc, the Makita BO4510, and the Black and Decker 4010-10.

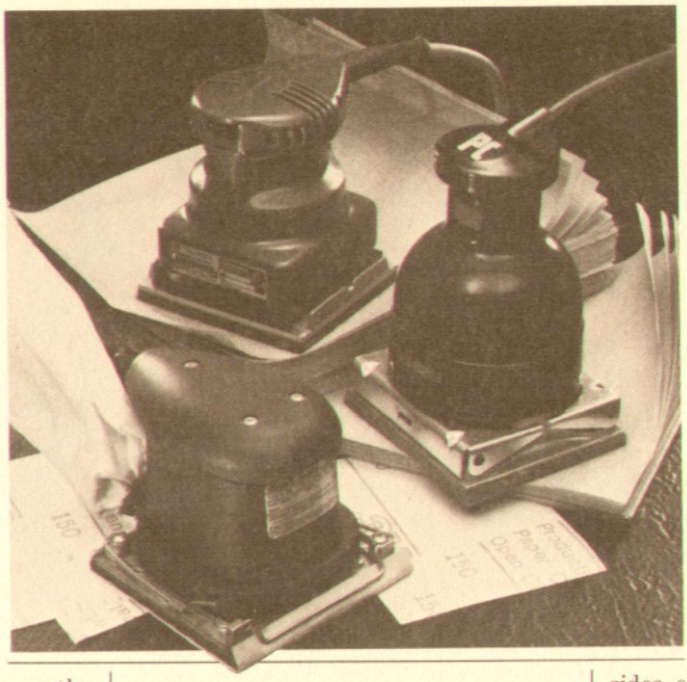

PORTER-CABLE

The Porter-Cable (formerly Rockwell) "Speed Bloc" has been on the market the longest time, and normally retails for $85.50. (As with the other sanders, the Speed Bloc can often be found on sale for $10 to $20 less).

LOADING. To load sandpaper, the Speed Bloc uses a small wrench to pry open the clamping bars on both sides of the bottom pad. Unfortunately, I can hardly keep track of our 25' extension cord, let alone a 3" long wrench. So 90% of the time I open the clamps by hand, which is very difficult (almost painful) because of the very stiff springs.

But once the sandpaper is mounted, it can be adjusted so it's tighter across the pad than any of the sanders tested. This is important because when you start out with only a 5/64" maximum travel (the diameter of the orbits), any slippage quickly reduces the efficiency of the sander.

HANDLE. The handle on the Speed Bloc is shaped so there's only one way it can be held (from the side), which after a period of time, encourages muscle fatigue, and eventually makes the sander difficult to hold. This problem is complicated by the 3.75 lbs. weight of the Speed Bloc, the heaviest of all three sanders we reviewed.

PAD. The Speed Bloc uses a felt pad attached to a thin metal plate that can be easily replaced by removing four small screws.

During use, the only problem is that the Speed Bloc can "get away from you" if it's allowed to raise up on one edge of the pad.

MAKITA

The constant promotion of the Makita BO4510 finishing sander (retailing for $79.00) has done more than anything else to bring palm sanders to the attention of most woodworkers. This includes what seems like a continual sale price of $49.

LOADING. The Makita clamping system includes an arm that swings out to pry open the clamps. This system works well for opening the clamps, but inserting the sandpaper can be a real hassle.

Because of the way the clamps are designed, it's often difficult to thread the sandpaper far enough under the clamp bar to produce a tight fit. (The easiest answer is to cut an 1/8" off the sheet of sandpaper so it doesn't have to be fed under the clamps quite so far.)

HANDLE. The Makita motor housing is shaped so there's a finger recess just below the crown of the housing. This allows the sander to be gripped from either the top, or around the sides of the housing. The advantage of having several different hand positions is that even after several hours of use, the sander still feels comfortable, and under complete control.

PAD. The Makita sander uses a felt pad that's attached to the bottom plate of the sander with a self-stick adhesive. Although this adhesive sticks well during use, it usually sticks too well when it's time to change pads, often requiring solvents to dissolve the adhesive.

A nice feature on the Makita (also found on the Black and Decker) is that the pad stops oscillating within one or two seconds after the switch is turned off so it can be set on a bench almost immediately.

BLACK AND DECKER

The most recent sander to come on the market, and the only one with a dust collection system, is the Black and Decker model 4010-10, which retails for $79.00.

LOADING. The Black and Decker sander uses a clamping system that incorporates the use of wire clamps, and is the easiest and quickest to load of all the sanders reviewed. (Although the sandpaper doesn't stay as tight as on the Porter-Cable.)

The only drawback to this system is that the ends of the wire clamps are bent upward on the sides of the sander, and poke my hand every time I use it.

HANDLE. The Black and Decker motor housing is shaped similar to the Makita's, but without the distinctive finger recess that help make the Makita handle so comfortable. But the biggest drawback to the handle is that after a short period, the motor heats up and it gets so hot it's almost impossible to hold.

DUST COLLECTION. Now we get to the dust collection system. In order to vacuum dust, there are six holes and 12 V-grooves on the outer edges of the foam rubber pad.

To make the system work, you have to punch six holes in the sandpaper (with a special punch kit that's provided). All of this is fine on flat surfaces, but the first time you hit a sharp edge, the sandpaper quickly tears to shreds.

Even if you don't punch holes in the sandpaper, the abundance of holes in the pad causes many of the same problems.

CONCLUSIONS

Between the three sanders tested, everyone here agrees on the winner — the Makita BO4510. The Makita sander provides the features and constant control that's needed for hours of use.

This isn't to say that it doesn't have its problems (the clamping system for the sandpaper surely could be improved), but from this field of sanders, it's the one we'd recommend as the best buy. (And it's the one we use most often in our shop.)

Modular Wall Unit

FLEXIBLE STORAGE

Modular furniture intrigues me because it's not just *one* piece of furniture. Instead, it's a system of interchangeable components that offers a wide range of flexibility.

Now that sounds complicated. But in order to make modular furniture work, each component must be as simple as possible.

Take the shelves on the wall unit shown here. They're simple in design, and the modular nature of the wall unit provides an easy method of adjusting them to any height desired.

Yet, these same shelves can be transformed into angled display racks (as shown in the detail photo, lower left). Two completely different functions from one basic design. That's what I find so intriguing about modular furniture.

The modular nature of the wall units also pays off from a construction standpoint. Once the basic frames are built, all that's needed are the shelves to make it a functional storage unit.

Then the base cabinets and upper cabinets can be added as time permits. It's simply a matter of building them whenever you want to, and adding them on.

Yet with all this flexibility, each component is very easy to build. In fact, only one joint (a tongue and groove) is used to build the frames and all of the components.

THE SIDE FRAMES

In its simplest form, each wall unit consists of two side frames and three connector frames. I started construction with the side frames.

The side frames consist of five pieces: two uprights (A) and three rails (B), see Fig. 1. (The uprights and rails are cut from 5/4 stock which is 1 1/16" thick, see Materials List, page 17.)

THE UPRIGHTS. Start by cutting the uprights to a width of 2½" and to a length of 84". Then a ¼"-wide groove is cut ¼" deep and centered on the inside edge of each upright, see Fig. 2. These grooves are used to join the fixed rails at the top and bottom of the side frames, and also to guide the sliding rail.

CUT THE GROOVES. To cut these grooves so they're centered on the edge of the upright, use a piece of scrap to set up the cut. Set the fence so the blade cuts somewhere near the middle of the scrap. Make a pass over the blade, then rotate the piece so the opposite face is against the fence, and make another pass.

This procedure will automatically center the groove. Then it's just a matter of adjusting the fence until the double passes produce a ¼"-wide groove.

Shop Note: Because the uprights are so long, I found it helpful to use a feather board to push them tight against the fence as the grooves are cut. (See page 23 for an explanation of this setup.)

DRILL HOLES FOR SHELVES. After the grooves are cut, a series of ¼" holes is drilled on each upright. These holes are for the shelf support pins, see Fig. 3.

Mark the center point of each hole 1" from the grooved edge of the upright and space them 3" apart, starting 12⅞" from the top of each upright. I used a brad point bit and drilled each hole ½" deep.

THE RAILS

To complete each side frame there are three rails (B) — two fixed rails (one at the top, one at the bottom), and one sliding rail. All the rails are cut to a width of 2½" and to a length of 10½". Then double rabbets are cut on both ends to produce stub tenons that fit the grooves in the upright, see Fig. 2.

Note: For the rails at the top and bottom of the frames, the stub tenons should fit fairly tight in the grooves. But the tenons on the sliding rail should slide easily down the length of the groove.

THREADED INSERTS. Later, when the wall unit is assembled, the connector frames are attached to these rails. In order to make the entire unit easy to assemble and disassemble, I mounted threaded inserts in the rails so the bolts could be removed easily. (This essentially makes "knock down" wall units.)

MOUNT INSERTS. To mount the two threaded inserts in each rail, drill ⅜"-diameter holes ¾" from the shoulders of the stub tenons and centered on the width of the rail, see Fig. 4.

After the holes are drilled for the inserts, there's a little trick to mounting them. Very often threaded inserts get twisted as they're screwed into the hole. To prevent this, cut the head off a ¼" bolt and chuck it into a drill press, see Fig. 5.

Thread a hex nut on the end of the bolt and then screw the threaded insert tight against the nut. Do not turn on the motor of the drill press. Instead, align the short unthreaded shaft of the insert in the pre-drilled hole by lowering the control arm of the drill press. Then rotate the chuck (by hand) to screw the insert into the rail.

ASSEMBLE FRAMES. Now the side frames can be assembled. Glue and clamp the rails between the uprights so they're flush with the ends of the uprights. Do not glue the center rail in place. (This is a sliding rail that will be attached to the sliding connector frame later.)

ROUND EDGES. After the side frames are glued up, round the four corners to a ¼" radius, see detail in Fig. 6. Then use a router to round all edges of the frame with a ¼" round-over bit.

SLIDING RAIL. Next, round over all four edges of the sliding rail, see Fig. 6. (I did this on a router table.) Then I rounded the shoulders at the ends of this rail with a wood file and smoothed them with a sanding block.

FIGURE 1

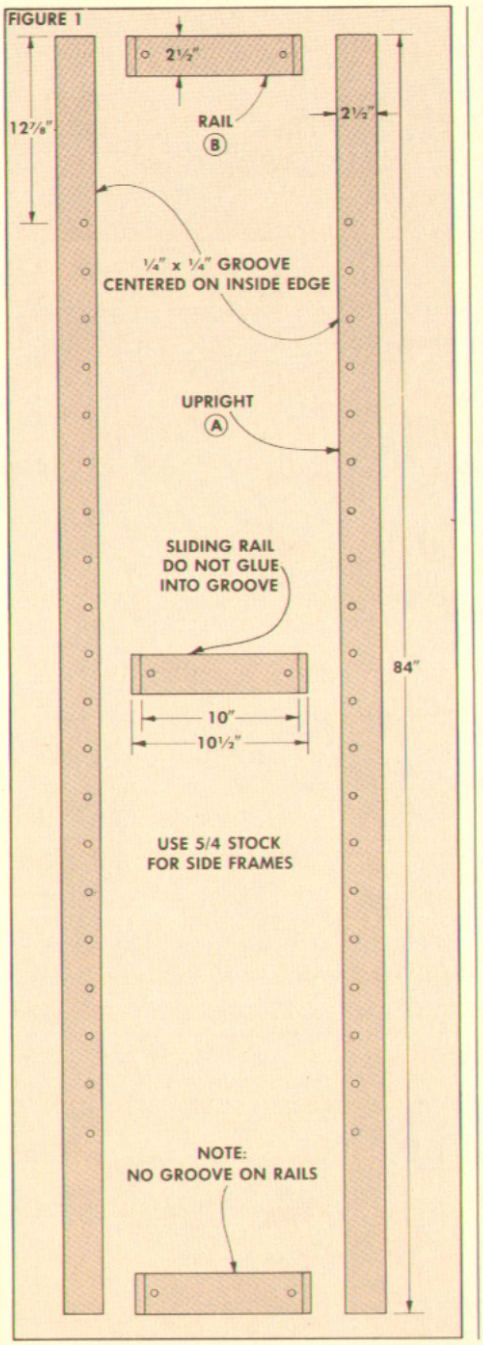

FIGURE 2

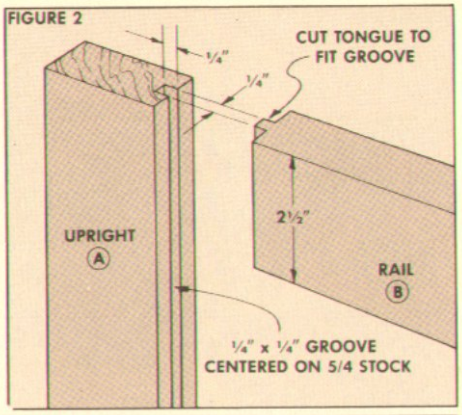

FIGURE 3

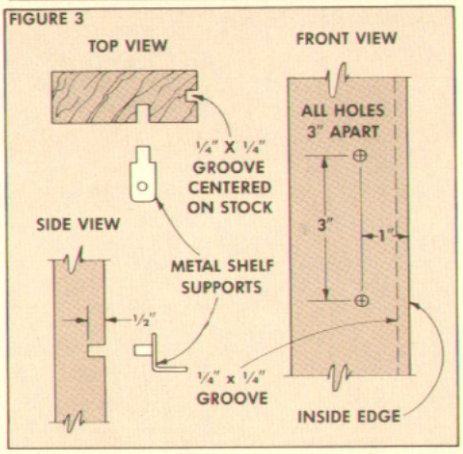

FIGURE 4

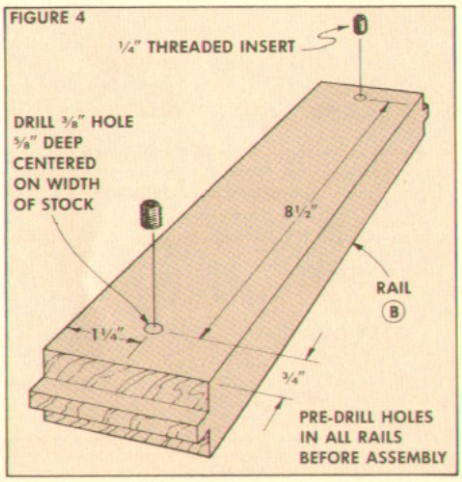

FIGURE 5

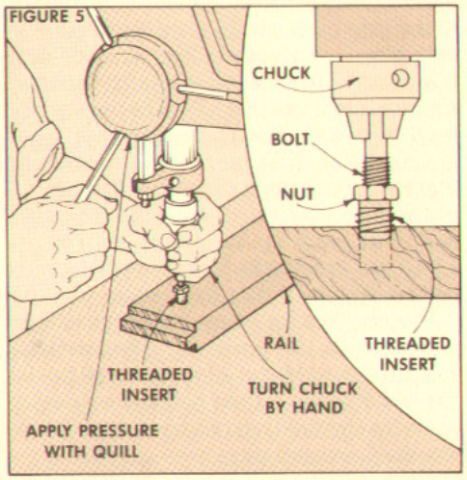

FIGURE 6

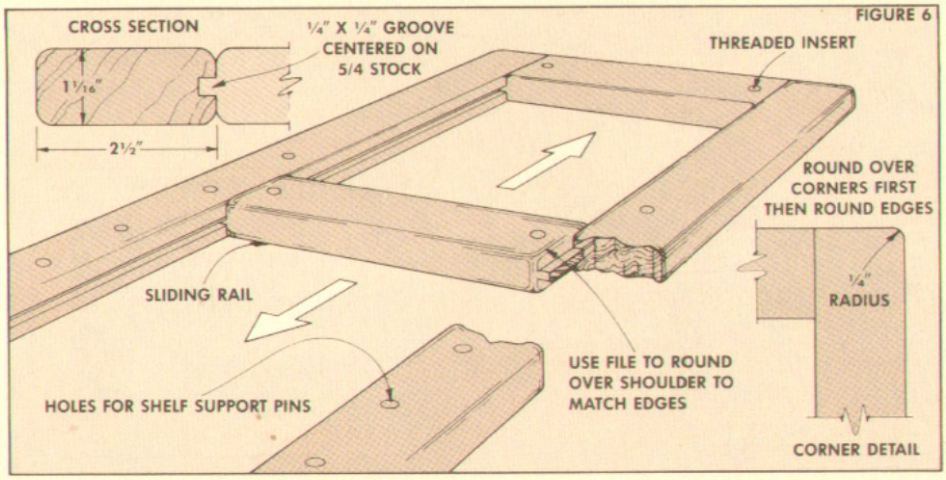

FIGURE 7

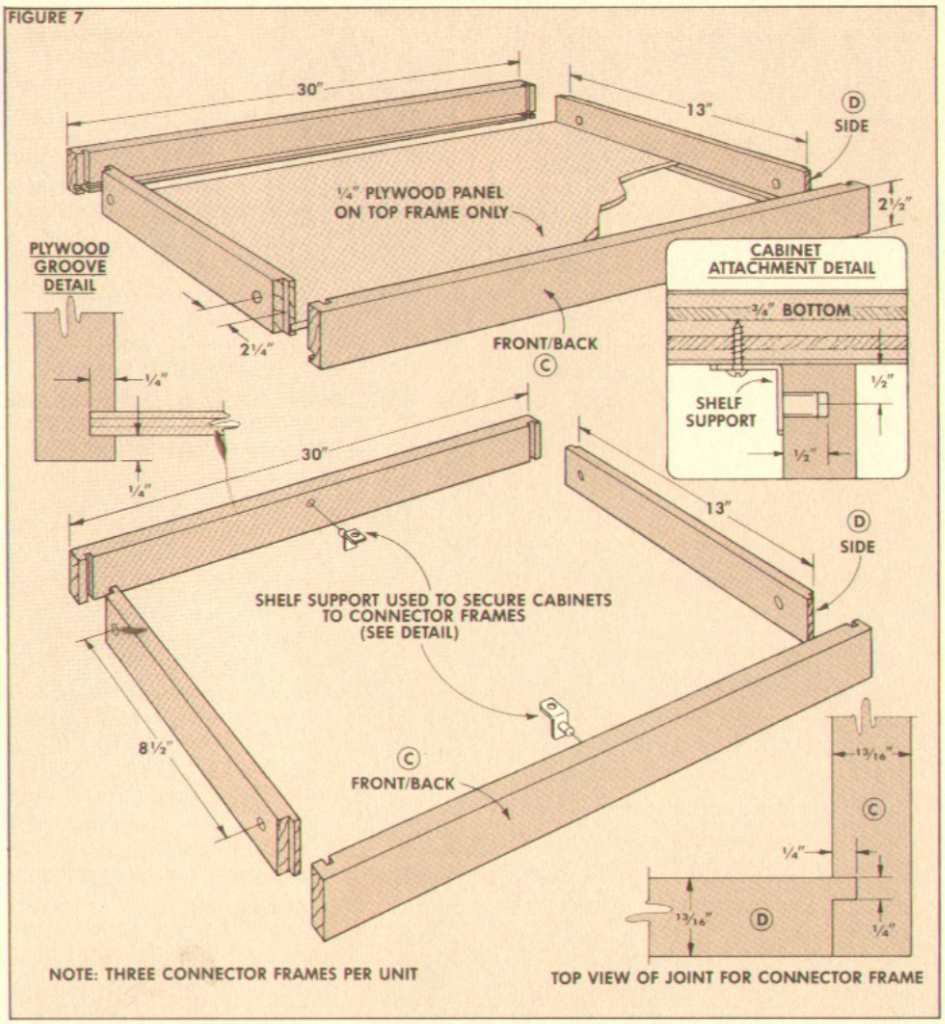

FIGURE 8

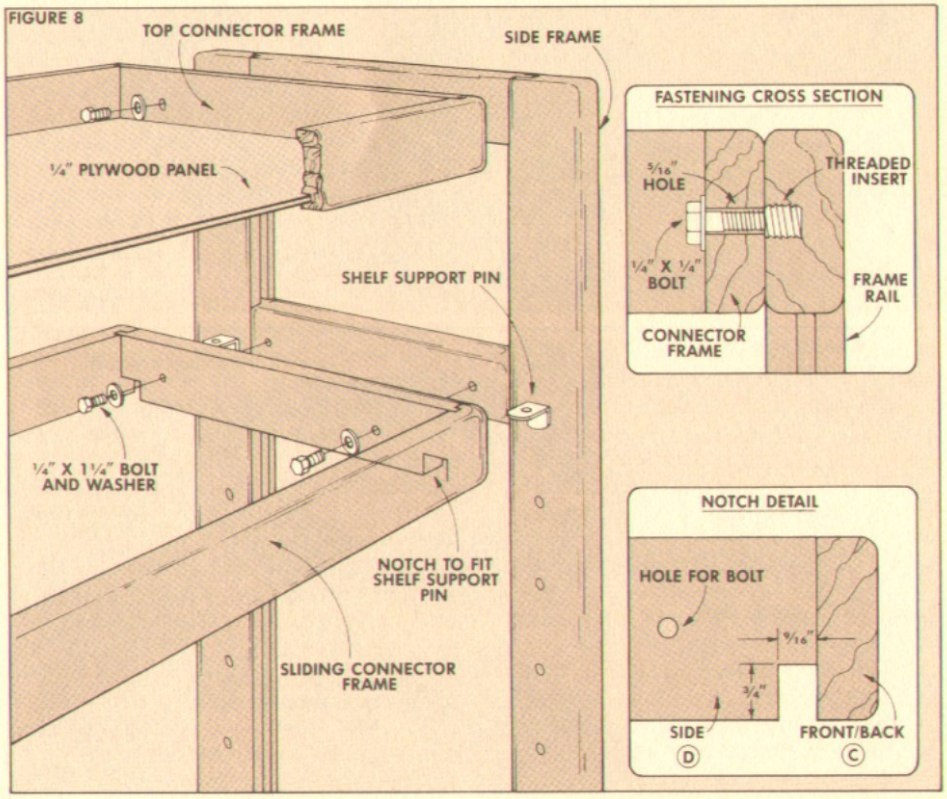

CONNECTOR FRAMES

The side frames of each wall unit are joined together with two connector frames (at the top and bottom). There's also a sliding connector frame near the middle of each unit. This sliding frame keeps the side frames from bowing out, and also supports the upper cabinets.

CUT TO SIZE. To make the connector frames, cut the front and back pieces (C) to a length of 30", see Fig. 7. (Shop Note: This 30" length was chosen because it makes the best layout for the plywood pieces used for the shelves and cabinets, see Cutting Diagram.)

The length of the side pieces (D) is determined by the sliding connector frame, refer to Fig. 8. Insert two shelf support pins and measure the distance between the outside edges. Then add ½" (for the two ¼"-long tongues), and cut the side pieces to this length.

CUT JOINTS. After the pieces are cut to size, they're joined with rabbet/dado joints. To make these joints, cut a dado in the front and back pieces ¼" wide and ¼" deep, see Detail in Fig. 7. Then cut a rabbet on the end of the side pieces, leaving a tongue to fit in the dado.

HOLES FOR BOLTS. Before assembling the frames, drill 5/16"-diameter holes in the side pieces (D) for the bolts that hold the connector frame to the rails, see Fig. 8. These holes are centered on the width of the side piece and positioned so that the side piece is centered on the width of the side frames.

BOTTOM FRAME. After these holes are drilled, the connector frame that goes at the bottom of each unit is complete and can be glued together.

TOP FRAME. As for the connector frame for the top of the unit, I added a plywood panel to it. (The overall appearance of the wall unit is better if you can't see through the top frame.) To add this panel, simply cut ¼"-deep grooves ¼" from the bottom edge of each piece, see Detail in Fig. 7.

SLIDING FRAME. Before gluing the sliding frame together, cut notches on the ends of the side pieces to fit over the shelf support pins, see Detail in Fig. 8. Also, drill holes in the front and back piece for shelf support pins, see Fig. 7. (These pins are used to mount the upper cabinets.)

ASSEMBLY. When all the connector frames are assembled, round over all edges with a ¼" round-over bit. Then the basic wall units can be assembled. Use ¼" x 1¼" hex head bolts to attach the top and bottom frames to the fixed rails.

For the floating frame, push the sliding rail between the uprights. (The uprights will flex enough to allow the rail to be twisted in place.) Then bolt the connector frame to the floating rail and let it rest on the shelf support pins.

The Shelves

The shelves on the wall units actually serve two purposes. In their normal position they're shelves, but they can be reversed and angled to become display racks, see Fig. 4. Each shelf is made of oak plywood with edging strips on the sides (F) and front (E), and a high "back stop" (G) on the back edge, see Fig. 1.

CUT PLYWOOD TO SIZE. To cut the plywood shelf to size, the measurements given in Figure 1 should be adjusted according to the actual dimensions of the side frame and the connector frames.

That is, the *width* of the plywood is determined by measuring the distance to the outside edges of the side frame. Then subtract the thickness of the front edging strip and the back stop, and add ½" for the two ¼"-long tongues, refer to Fig. 4.

The *length* of the plywood is actually equal to the length of the connector frame, minus the thickness of the two edging strips, plus ½" for the two ¼"-long tongues. Then subtract another ⅛" to allow a clearance for the shelf support pins.

EDGING STRIPS. After the plywood is cut to size, rip the edging strips (E and F) and the back stop (G) from 4/4 stock, and cut all these pieces to rough length.

TONGUE AND GROOVE. The edging strips are joined to the plywood with tongue and groove joints. (A step-by-step article on this joint appears on page 20.)

Basically, cut rabbets on both faces of the plywood to produce tongues on all four edges. Then cut grooves in the edging pieces to fit the tongues.

Shop Note: Set up the cuts for the grooves by working from the bottom edge of the strips instead of the top edge. This will allow you to cut the groove in the back stop with the same setting as the grooves for the three edging strips.

ASSEMBLY. After the grooves are cut, trim the side strips to final length, and glue them to the plywood. Then trim the front strip and the back stop to final length and glue them in place.

When the glue is dry, remove the clamps and plane the surface of the edging strips flush with the surface of the plywood. Then round the front corners and the top corner of the back stop to a ¼" radius, see Figs. 2 and 3. And round all edges with a ¼" round-over bit and pilot.

Shop Note: Fill the groove holes on the front edging strip and the back stop, so the pilot of the router bit doesn't "dip" when it runs over them.

NOTCHES. To complete the shelves, cut notches in the end strips to fit over the shelf support pins, refer to Fig. 4. (I cut these notches with a back saw and chisel.)

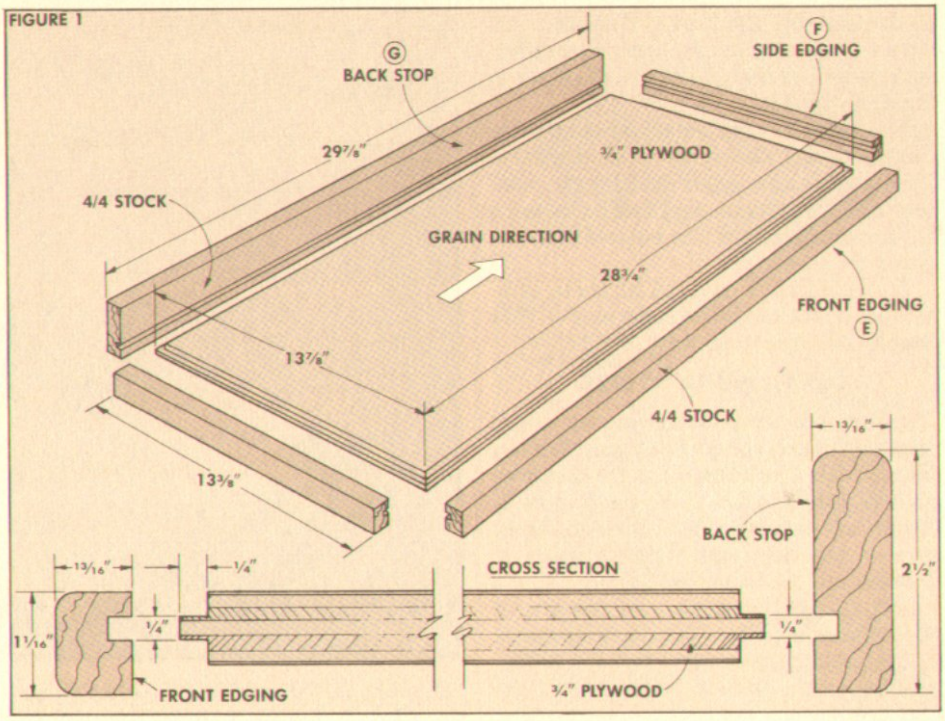

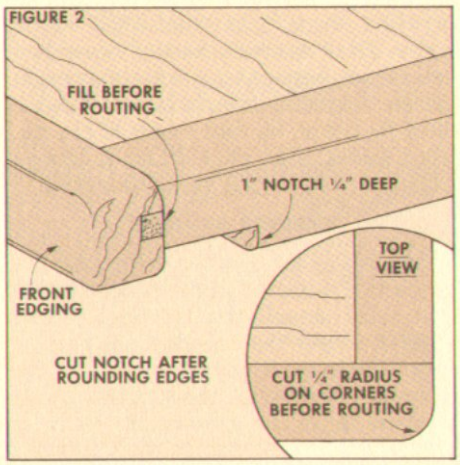

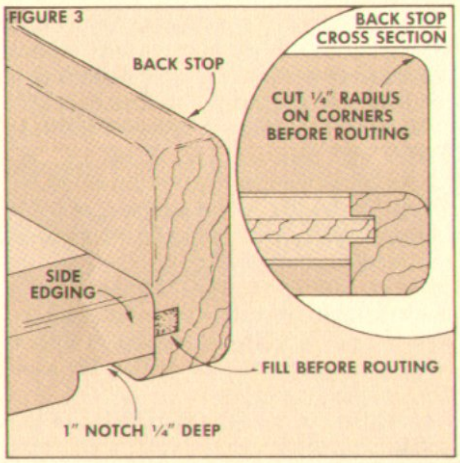

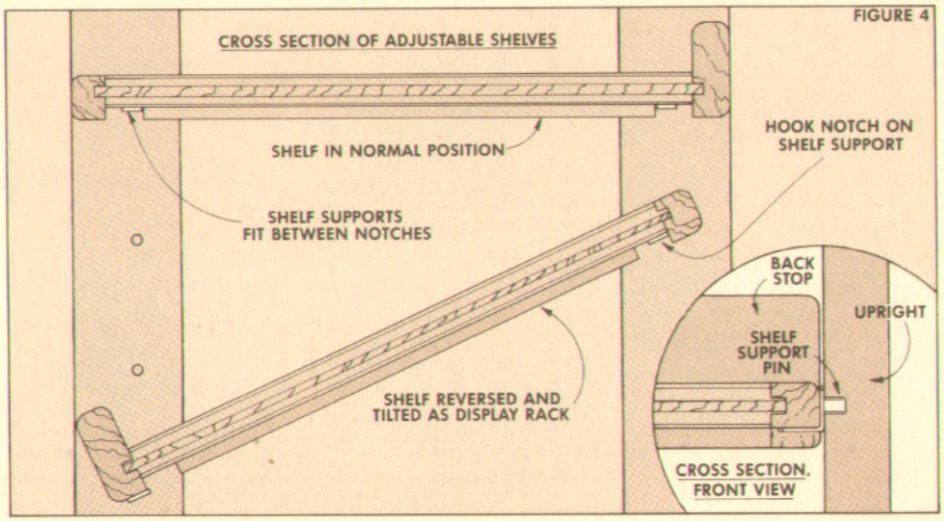

The Cabinets

To demonstrate the kind of flexibility you have with these units, we built four different types of cabinets. (They're all shown in the cover photo.)

You have the option of building base cabinets with doors, or with drawers. Then there's the upper hutch-type cabinets with glass doors. And finally, there's a fall-front cabinet that can be used for storage or as a desk.

To make things easy, all of these cabinets are built exactly the same way — with tongue and groove joinery.

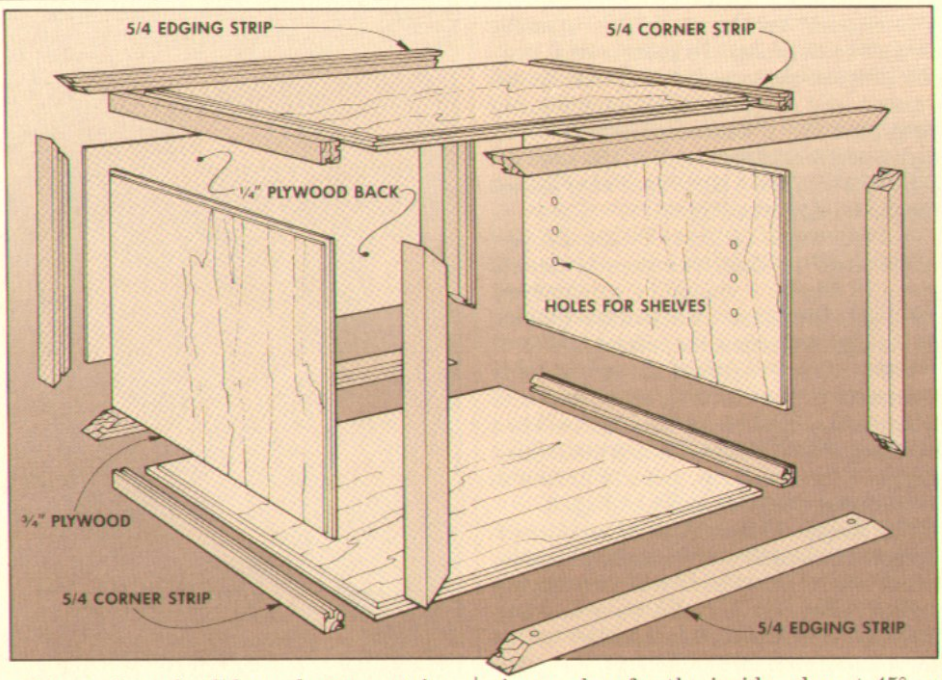

CUT PLYWOOD TO SIZE

The first step for building any (or all) of these cabinets is to cut the ¾" oak plywood sides to size. The dimensions for the three sizes of cabinets are given in Figure 1. (There are actually only three different sizes — the base cabinets with doors or drawers are the same size.)

ACTUAL SIZE. However, the lengths of the top/bottom pieces (DD, JJ, NN) shown in Figure 1 may have to be altered depending on the *actual* dimensions of the wall unit frames you build.

These top/bottom pieces are shown as 28¼" long. This is the correct length if the distance between the side frames (which is the length of the connector frame) is 30".

Measure the distance between the side frames and subtract 1¾". (This 1¾" accounts for the width of the two corner strips, minus the length of the tongues, plus ⅛" clearance space, see Fig. 2.) All other pieces can be cut as shown in Fig. 1.

HOLES FOR SHELVES. I wanted to put shelves inside the cabinets, so after all the plywood pieces were cut to size, I drilled holes in the cabinet side pieces for shelf support pins, see Fig. 1.

TONGUES. To join the four sides of the cabinets, I used solid-wood corner strips, see Fig. 2. I also covered the exposed plywood edges with solid-wood edging strips. All of this solid-wood/plywood joinery is accomplished with tongue and groove joints — which means tongues must be cut on all four edges of the plywood pieces. (See page 20 for a detailed explanation of cutting these tongues.)

CORNER JOINERY

To make the four corner strips, cut the strips 1 1/16" square (5/4 hardwood stock is 1 1/16" thick actual) and to rough length, about 1" longer than needed, see Fig. 2.

CUT GROOVES. Then cut grooves on two adjacent edges to fit the tongues on the plywood. After the grooves are cut on all pieces, chamfer the inside edge at 45° so the remaining surface around the grooves is ¾" (to match the thickness of the plywood), see Step 4 in Fig. 2.

TRIM TO LENGTH. Before gluing the corner strips to the plywood, trim them to final length to match the distance between the shoulders of the tongues on the plywood pieces, see Fig. 2.

ASSEMBLY. When assembling the cabinets, I found it was too difficult to assemble all four sides and four corner strips at once.

Instead, glue and clamp the corner strips to both ends of the top/bottom plywood pieces only. Then after the glue is dry, glue and clamp the side pieces between the top and bottom pieces.

FIGURE 1

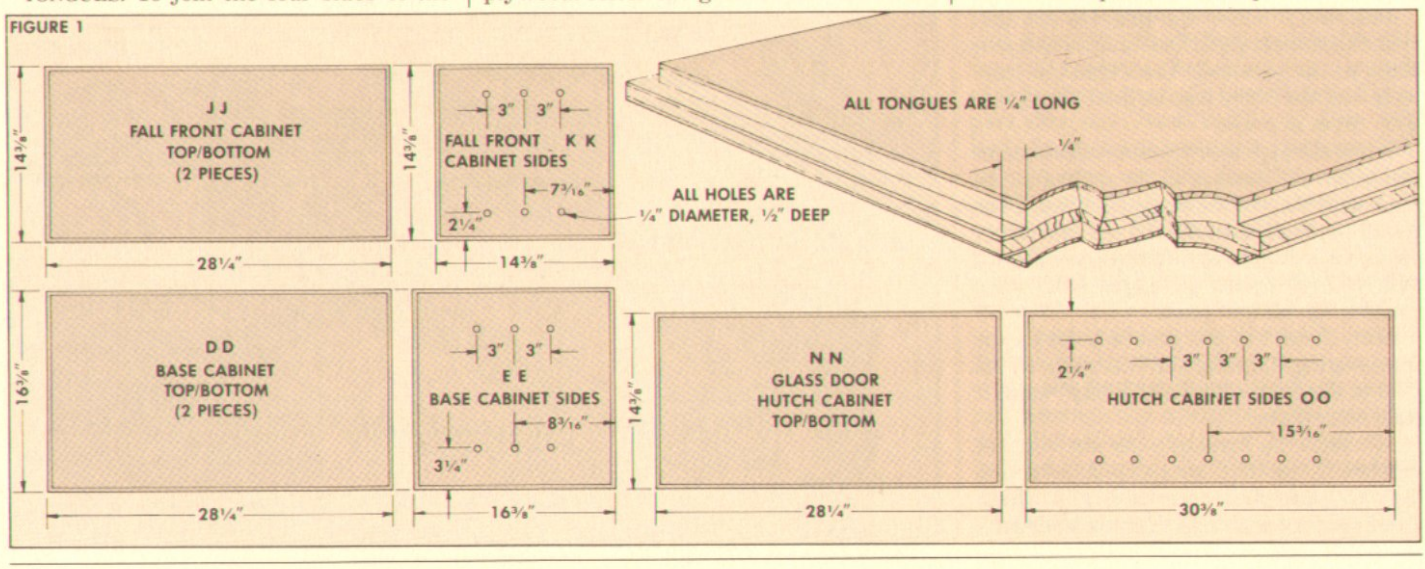

EDGING STRIPS

Now edging strips are cut out of 5/4 stock to cover the exposed plywood edges on the front and back of the cabinets. Cut each strip 1 1/16" square and to rough length (1" longer than needed). Then cut a groove on one edge to fit the tongues, see Fig. 3. (Again, the method for cutting these grooves is discussed on page 20.)

RABBET FOR BACK. At this point it's best to separate and mark the strips that will be used on the back of the cabinet. Then a 1/4" x 3/8" rabbet is cut for the 1/4" plywood back, see Fig. 3.

MITER TO LENGTH. All of these pieces are mitered to length and glued and clamped to the tongues on the cabinet. However, to get the best fit, I followed this procedure.

First I mitered only one end of each piece. Then I mitered the other end of the vertical pieces to final length — and glued and clamped these pieces to the cabinet.

When the glue is dry, miter the horizontal pieces to length, sneaking up on the final length to get a good tight fit with pieces already glued on.

HOLES FOR DOOR HINGES. For any of the cabinets that have doors, I used special hinges that require a hole for a plastic insert, see Fig. 4. Before actually gluing any of the edging pieces on the cabinets that have doors, drill the holes for these inserts.

All of these holes are centered 3/8" from the *front* edge of the strip and 3/4" from the mitered corner, see Fig. 4. The base cabinets with wood doors require 5/16"-diameter holes on the top and bottom edging strips, see Fig. 4.

The upper "hutch" cabinets with glass doors, require 11/32"-diameter holes on the top and bottom pieces, see Fig. 4. And the cabinet with the fall-front wooden door, requires 5/16"-diameter holes on the vertical side pieces. (Mounting the hinges is discussed in more detail on the next two pages.)

ROUND-OVER EDGES. After all the edging strips are added, round over all edges with a 1/4" round-over bit, see Fig. 7.

PLYWOOD BACKS. After the edging strips are attached, I mounted the backs with buttons so they could be removed if necessary, see Fig. 6.

SHELVES. Then I made plywood shelves for the base cabinets and the upper cabinets. This is simply a matter of cutting the plywood to size to fit inside the cabinet (allowing 1/8" in length for the shelf support pins), and covering the front edge with iron-on veneer tape.

MOUNT TO WALL UNITS. The base cabinets can simply be placed on the bottom connector frames. But the "hutch" cabinets and the fall front cabinet should be screwed in place with shelf support pin, refer to Fig. 7 on page 10.

FIGURE 2

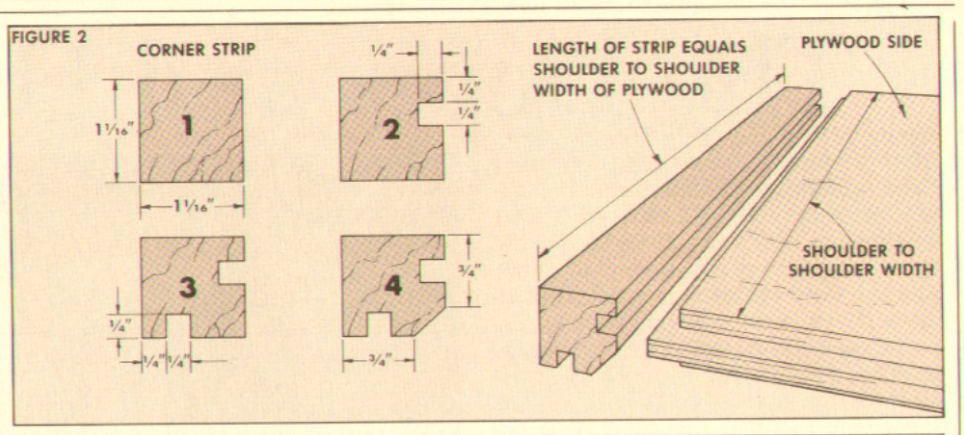

FIGURE 3

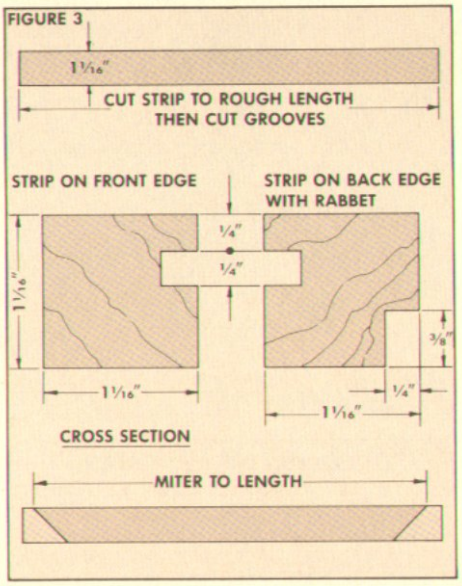

FIGURE 4

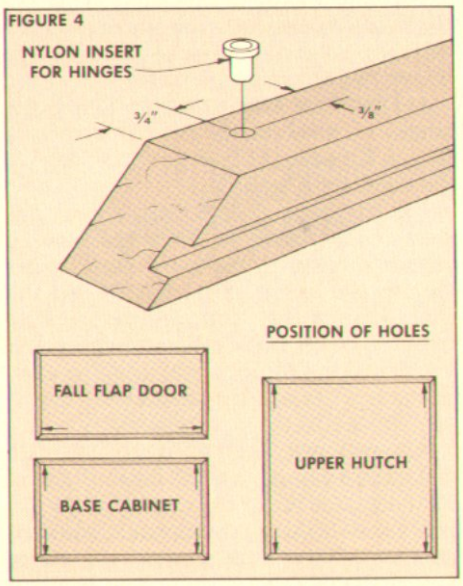

FIGURE 5

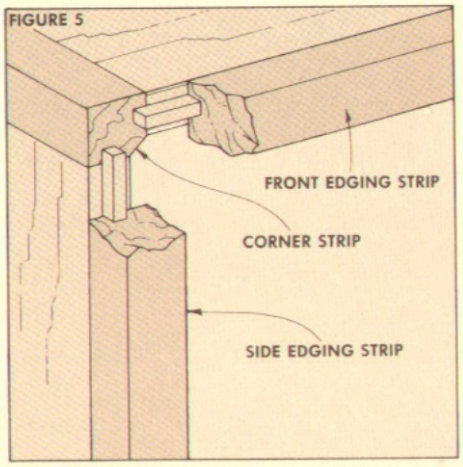

FIGURE 6

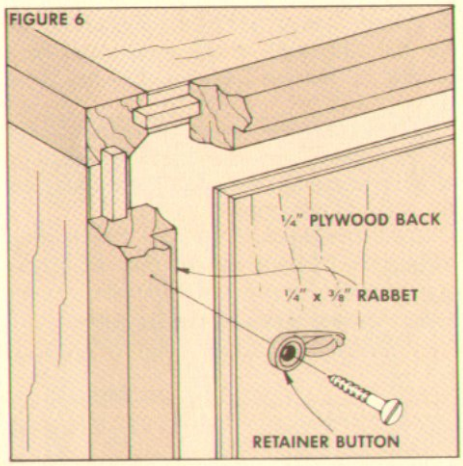

FIGURE 7

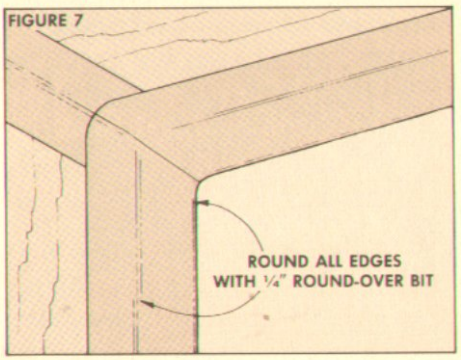

FIGURE 8

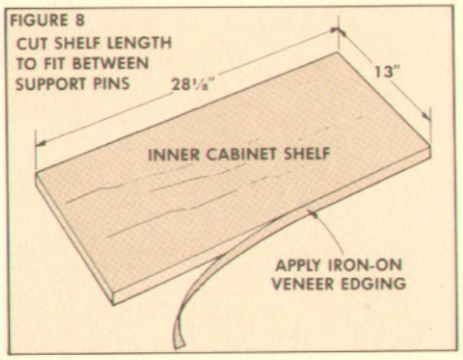

The Doors and Hardware

After the cabinets are assembled, there's a choice of three different doors. For the base cabinets, we added twin wood doors as shown in the photo at right. On the upper hutch cabinets we used glass doors. And the third variation is a fall-front lid that's shown in the photo on page 8.

CUT PLYWOOD TO SIZE. The first step in building the fall front door or the twin doors on the base cabinets is to cut the plywood panels to size, see Fig. 4. To get the final size, measure the openings in the cabinets. Then you have to allow for the hinges and the edging strips.

ALLOWANCE FOR HINGES. The pivot hinges we used for these doors require a ⅛" gap between the frame and the edge of the door, see Fig. 2.

For the base cabinet twin doors, this means subtracting ¾" from the vertical cabinet opening (⅛" top and bottom) to get the finished height of the door. To get the width of each door, subtract a total of ⅜" from the width of the cabinet opening and divide by two. (This ⅜" allows ⅛" on each side plus ⅛" separation between the doors, see Fig. 1.)

After allowing for the hinges, the two dimensions you get are the finished size of the doors, including the edging strips. To get the size of the plywood panels, subtract another ¼" from each dimension to allow for the edging strips and tongues, see Fig. 4. (Note: You're actually subtracting ½" for the thickness of the strips and then adding ¼" for the tongues. The net is ¼" on each side.)

CUT TO SIZE. Now the plywood can be cut to final size. Then rout double rabbets on all four edges to produce ¼" x ¼" tongues for the edging strips.

EDGING STRIPS. To make the edging strips, rip ½"-wide strips from 4/4 stock.

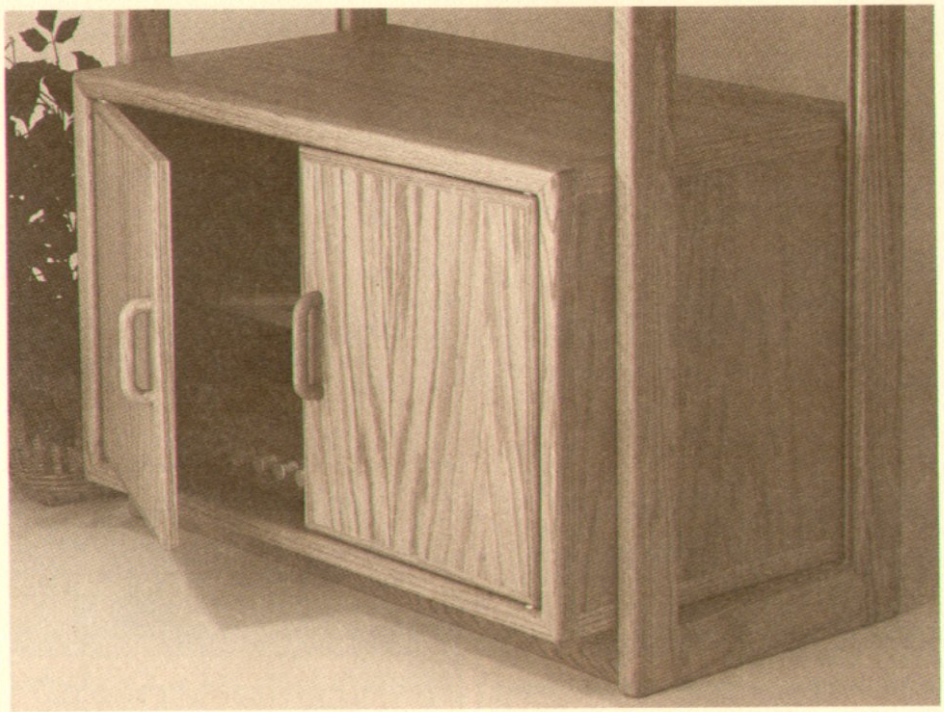

FIGURE 2 WOODEN DOOR CORNER DETAIL

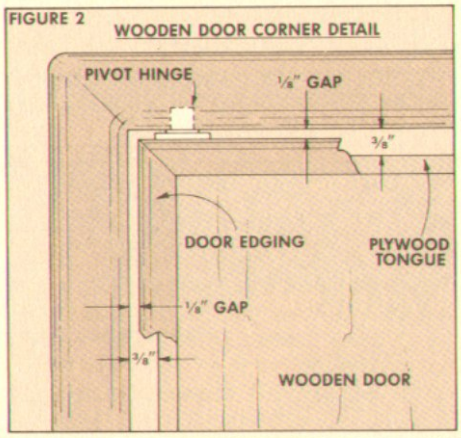

FIGURE 3 GLASS DOOR CORNER DETAIL

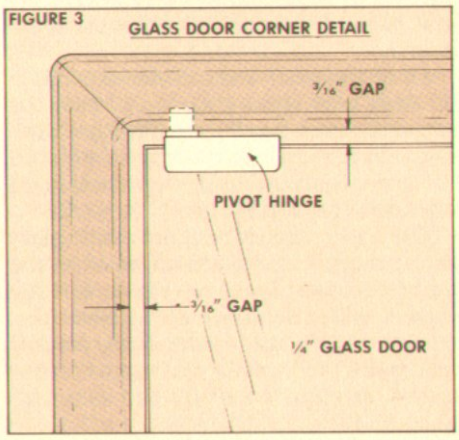

FIGURE 1

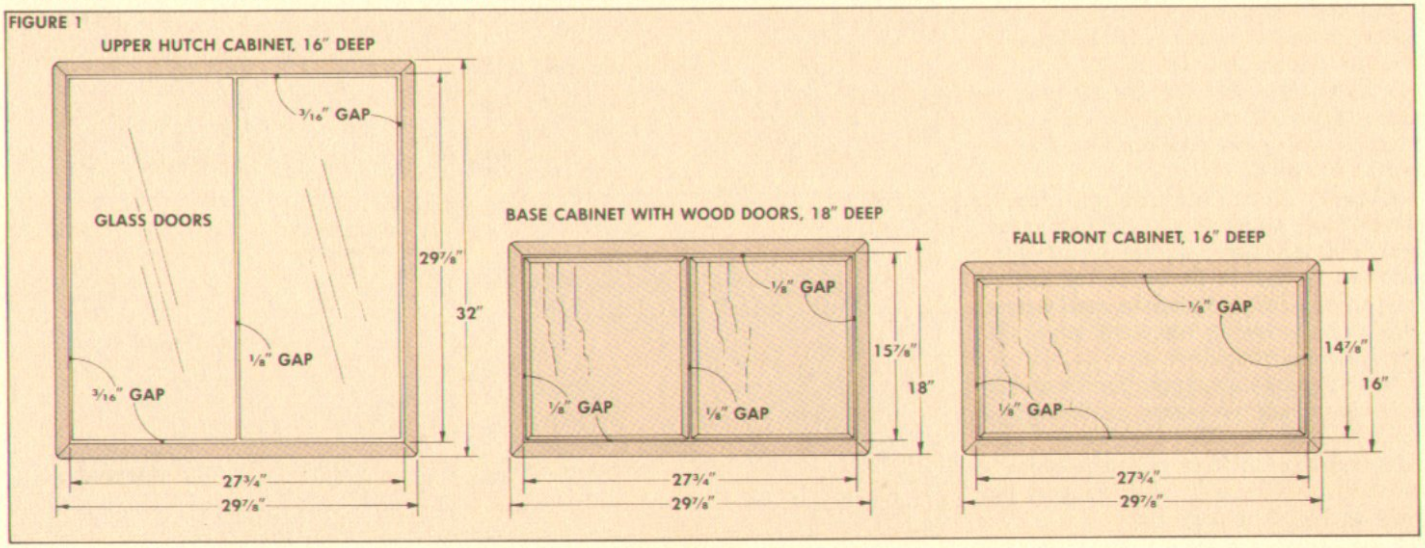

Then cut grooves down the center of each strip to fit the tongues on the plywood. Next, miter the pieces to length and glue them on the plywood. And finally, round the outside edges of the door with ¼" round-over bit. (A complete description of making these edging strips appears on page 20.)

GLASS DOORS. That's how the wood doors are made. To get the dimensions for the glass doors for the upper cabinets, measure the cabinet opening. Then subtract ⅜" from the height (3/16" top and bottom), see Fig. 3.

To get the width of each door, subtract a total of ½" from the width of the opening and divide by two. (This ½" allows for 3/16" on each side plus ⅛" separation between the doors, see Fig. 1.)

I took the final dimensions for the glass doors to a local glass store and had them cut ¼" glass to size and grind the edges smooth.

MOUNTING THE DOORS

The hinges used to mount the doors require a small nylon bushing mounted in the frame of the cabinet. (These bushings should already be in place, see page 13, Fig. 4.)

MOUNT GLASS DOORS. To mount the glass doors, simply push the hinge's stem into the nylon bushing, see Fig. 5. Then place the shoe plates on the edge of the glass, slide the glass into the hinge, and tighten the screws.

MOUNT WOOD DOORS. Mounting the wood doors requires a little more work. First, push the swivel pin section of the hinge into the nylon bushing, see Fig. 6. Then lay the cabinets face down and position the wood doors in the front opening.

Now slide a mounting plate into the swivel sections at the top and bottom of the door, and mark the position of the screw holes. Then drill pilot holes and screw the mounting plates to the door. Finally, slide the mounting plate into the swivel sections and screw them in place.

MOUNT FALL FRONT. To support the fall front door, I used telescopic lid supports, see Fig. 9. To mount these, you'll need a small shim to allow for the extra-wide edging strip on the front of the cabinet.

HANDLES. To complete the doors, I added wooden handles, see Fig. 7. (On the glass doors, I asked the glass store to drill holes for the handles. They had the special bits needed to drill through glass.)

DOOR CATCH. To mount the magnetic catches, glue a small wood shim on the inside lip of the edging strip, see Fig. 4.

FINAL ASSEMBLY. There's one last little trick to assembling these wall units. To hold them tight against each other, drill 5/16" holes through the connector frames at both the top and bottom of each unit and bolt the units together, see Fig. 10.

FIGURE 4

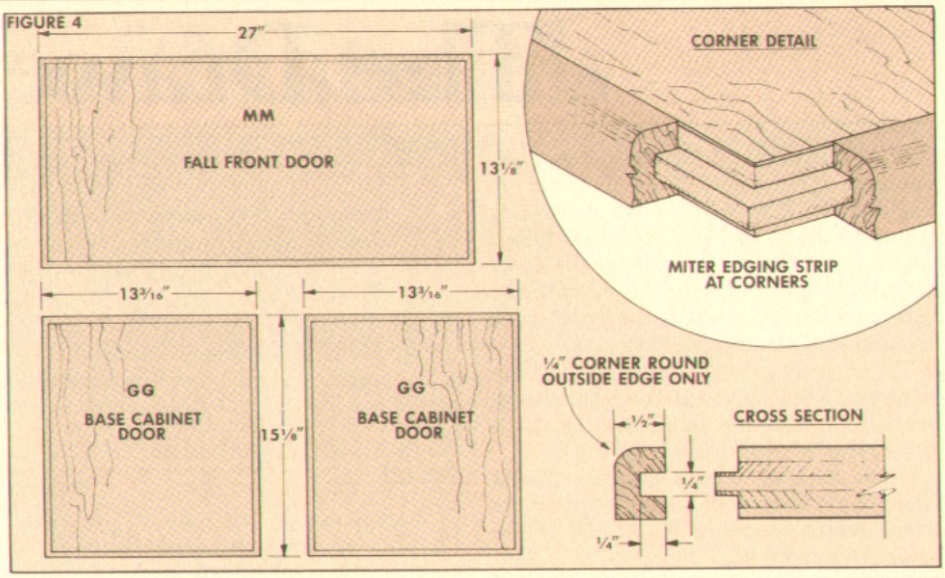

FIGURE 5

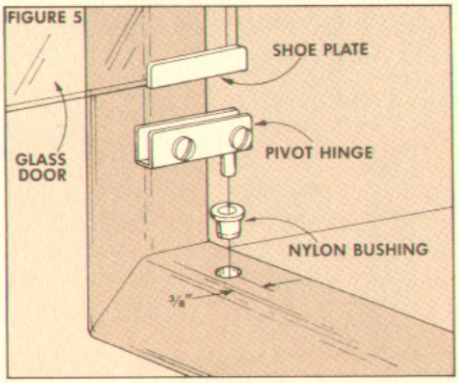

FIGURE 6

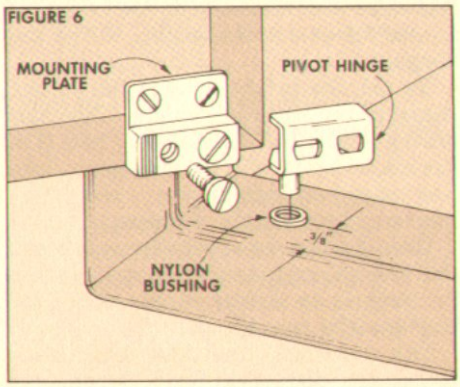

FIGURE 7

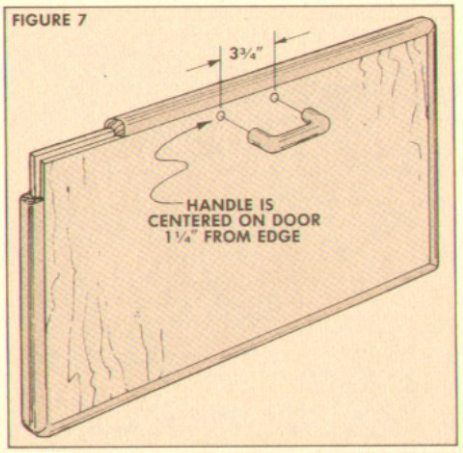

FIGURE 8

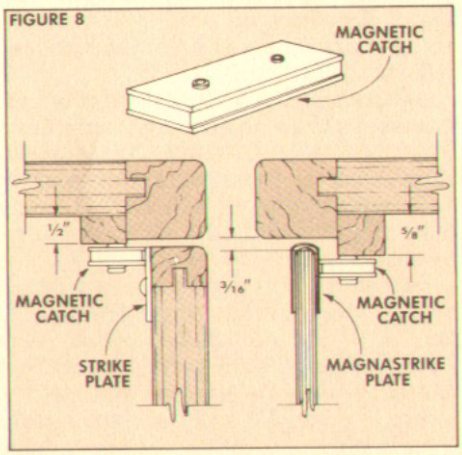

FIGURE 9

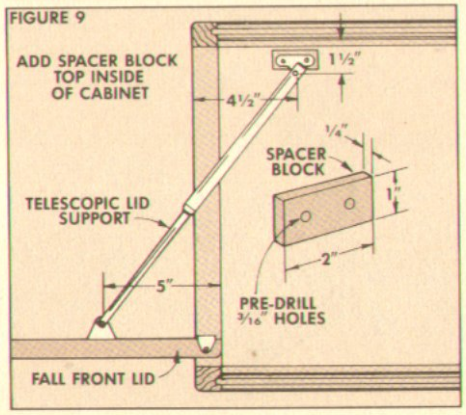

FIGURE 10

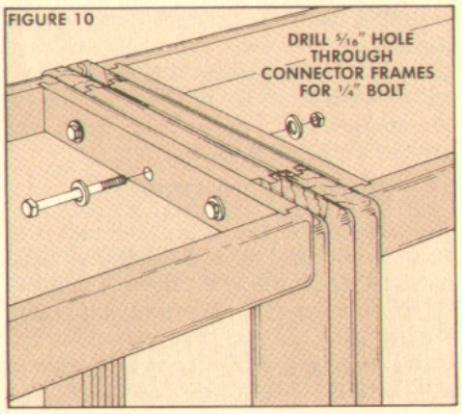

The Drawers

The wall unit and all the components are complete at this point. The only other option is adding drawers (instead of doors) to one of the base units. One of the nice things about the hardware we used for the doors is that it can be removed (along with the door) and the only trace is the small nylon bushing that's barely visible.

The drawers consist of two parts: a false front that's built just like the wood doors, see Fig. 1, and the basic drawer that's made with ½" stock, see Fig. 2.

FALSE FRONTS. I built the false fronts first. To get the size of the plywood for the fronts (HH), measure the width of the cabinet opening and subtract ¾". (This allows for a ⅛" clearance on each side, and a total of ½" for the edging strips and tongues.)

To get the height of each false front, measure the vertical opening. Then subtract a total of 1⅜" and divide by two. (The 1⅜" allows a total of 1" for the edging strips and tongue on both drawers, and ⅜" for clearance between the drawers.)

Once the final size of each drawer front is determined, cut the panels to size and then cut tongues on all four edges and add the edging strips, see Fig. 1.

THE DRAWERS. The false front is attached to a four-sided inner drawer, see Fig. 2. This drawer is sized to fit the cabinet, allowing for the metal drawer guides, refer to Fig. 4.

As shown in Fig. 3, the four sides of this drawer don't have to be as high as the false front. I cut them all out of 5¼"-wide stock. Then to join the four sides, I used a router and dovetail jig to make half-blind dovetails. (See *Woodsmith* No. 22 for the step-by-step details on this joint.)

ASSEMBLY. After the joints are cut, cut a groove along the bottom edge of each piece for the ¼" plywood drawer bottom, see Detail in Fig. 3. Then assemble the drawer and drill holes for the drawer handle screws, see Fig. 3. Finally, screw the false front in place.

MOUNT DRAWER SLIDES. Before mounting the metal drawer slides, the sides of the cabinet have to be shimmed out flush with the edging strips on the front edge of the cabinet, see Fig. 5. Then fasten the drawer to the metal slides.

APPLY THE FINISH

The last step for the entire wall unit is to apply the finish. I would recommend an oil finish (Watco Danish Oil, Minwax Antique Oil, Hope's Tung Oil). We used Sutherland Welles Tung Oil for this project — applying two coats of Sealer to all surfaces, and then one coat of Low Lustre.

FIGURE 1

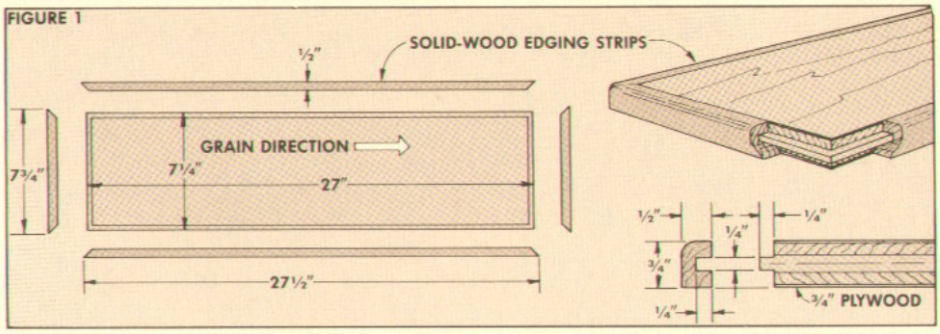

FIGURE 2

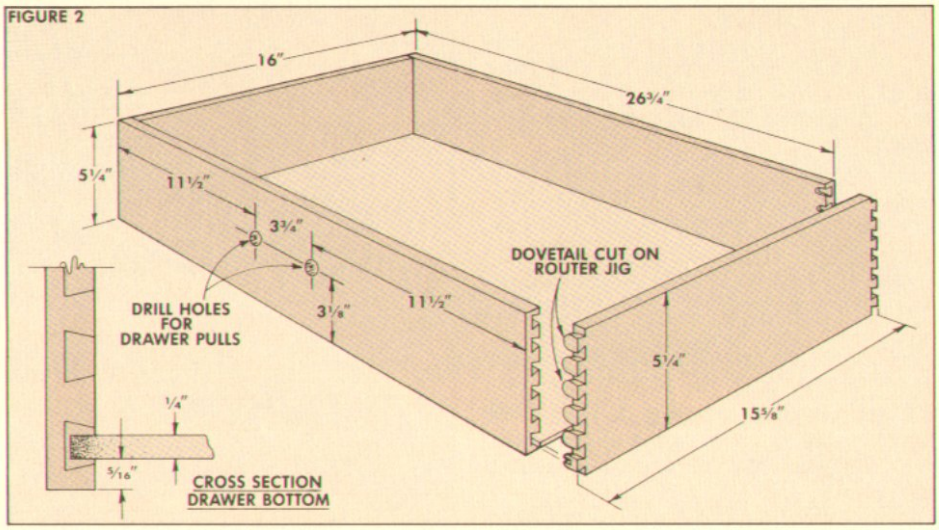

FIGURE 3

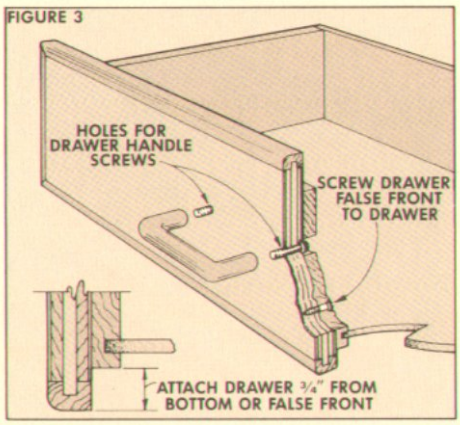

FIGURE 4

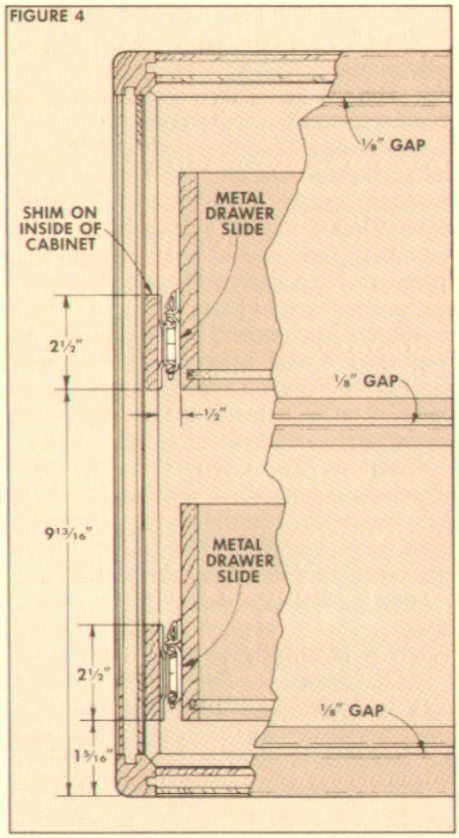

FIGURE 5

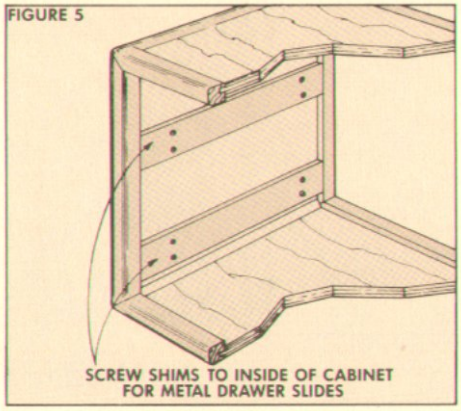

List of Materials

ITEM	HARDWOOD		PLYWOOD		HARDWARE
SIDE FRAMES CONNECTOR FRAMES	A Side Frame Upright (4) B Side Frame Rail (6) C Connector Fr. Frt/Bk (6) D Connector Fr. Sides (6)	1 1/16 x 2 1/2 - 84 1 1/16 x 2 1/2 - 10 1/2 13/16 x 2 1/2 - 30 13/16 x 2 1/2 - 13	AA Connector Fr. Panel (1)	1/4" ply. cut to fit	12 1/4" Threaded Inserts 12 1/4 x 1 1/4" Bolts 6 Shelf Support Pins
THREE COMBINATION SHELVES	E Front Edging Strip (3) F Side Edging Strip (6) G Back Stop (3)	13/16 x 1 1/16 - 29 7/8 13/16 x 1 1/16 - 13 3/8 13/16 x 2 1/2 - 29 7/8	BB Shelf Panel (3)	3/4 x 13 7/8 - 28 3/4	12 Shelf Support Pins
TWO CABINET SHELVES			CC Shelf (2)	3/4 x 13 - 28 1/8	16 feet Iron-on Edging
ONE BASE CABINET WITH DOORS	H Corner Strips (4) I Top/Bot Edging Strips (4) J Side Edging Strips (4) K Door Edging Strips (4)	1 1/16 x 1 1/16 - 15 7/8 1 1/16 x 1 1/16 - 29 7/8 1 1/16 x 1 1/16 - 18 3/4 x 1/2 - 36	DD Top/Bottom (2) EE Sides (2) FF Back (1) GG Door Panel (2)	3/4 x 16 3/8 - 28 1/4 3/4 x 16 3/8 - 16 3/8 1/4" ply. cut to fit 3/4 x 13 3/16 - 15 1/8	2 pair Pivot Hinges 1 Magnetic Catch 2 Oak Wire Pulls 10 Panel Retainers 10 Shelf Support Pins
BASE CABINET WITH DRAWERS	L Drawer Edging Strips (4) M Drawer Frt/Bk (4) N Drawer Sides (4)	3/4 x 1/2 - 36 1/2 x 5 1/4 - 26 3/4 1/2 x 5 1/4 - 15 5/8	HH Drawer False Front (2) II Drawer Bottom (2)	3/4 x 7 1/4 - 27 1/4" ply. cut to fit	2 Oak Wire Pulls 2 sets 16" Drawer Slides
ONE FALL FRONT CABINET	O Corner Strips (4) P Top/Bot Edging Strips (4) Q Side Edging Strips (4) R Door Edging (3)	1 1/16 x 1 1/16 - 13 7/8 1 1/16 x 1 1/16 - 29 7/8 1 1/16 x 1 1/16 - 16 3/4 x 1/2 - 36	JJ Top/Bottom (2) KK Sides (2) LL Back (1) MM Door Panel (1)	3/4 x 14 3/8 - 28 1/4 3/4 x 14 3/8 - 14 3/8 1/4" ply. cut to fit 3/4 x 27 - 13 1/8	1 pair Pivot Hinges 1 Magnetic Catch 1 Oak Wire Pull 2 Support Arms 10 Panel Retainers 10 Shelf Support Pins
ONE HUTCH CABINET WITH GLASS DOORS	S Corner Strips (4) T Top/Bot Edging Strips (4) U Side Edging Strips (4)	1 1/16 x 1 1/16 - 13 7/8 1 1/16 x 1 1/16 - 29 7/8 1 1/16 x 1 1/16 - 32	NN Top/Bottom (2) OO Sides (2) PP Back (1)	3/4 x 14 3/8 - 28 1/4 3/4 x 14 3/8 - 30 3/8 1/4" ply. cut to fit	2 pair Glass Hinges 1 Magnetic Catch 2 Magnastrike Plates 2 Oak Wire Pulls 10 Panel Retainers 14 Shelf Support Pins

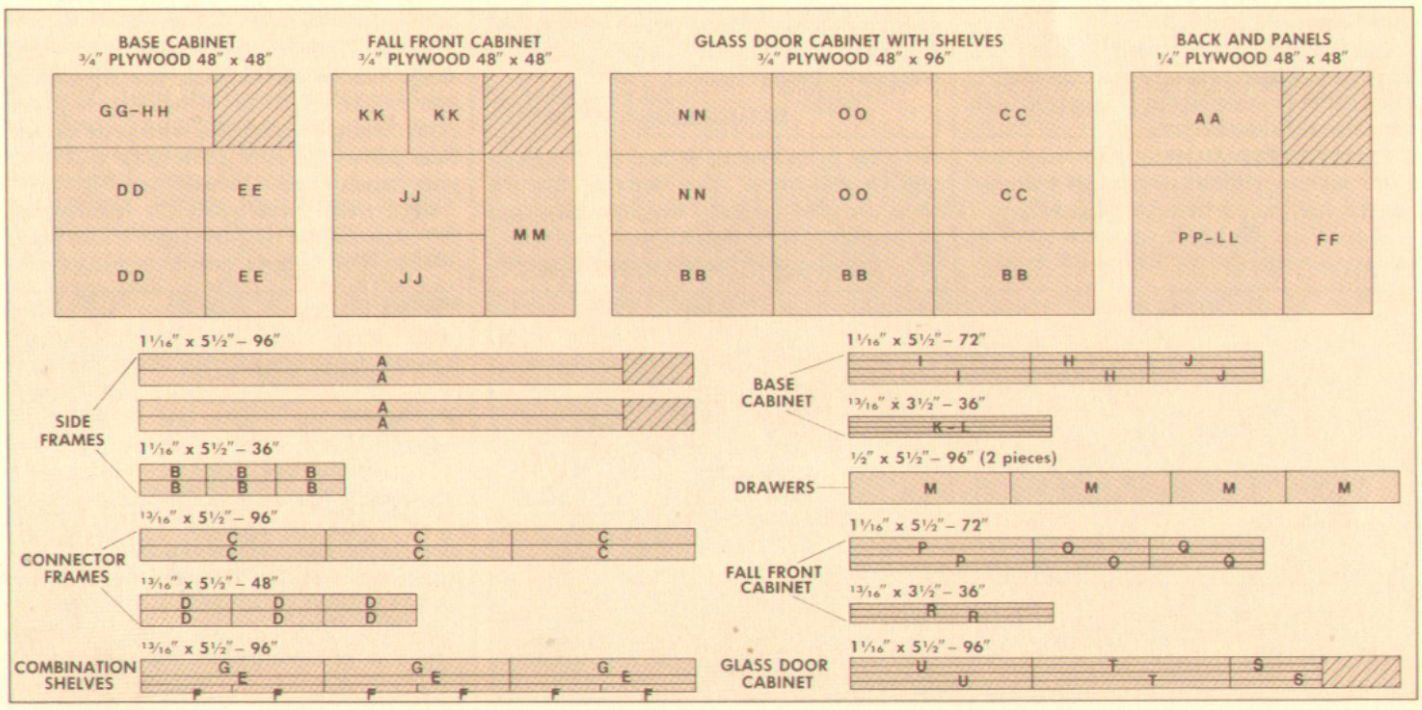

Desk Clock

KEEPING TABS ON THE TIME AND TEMPERATURE

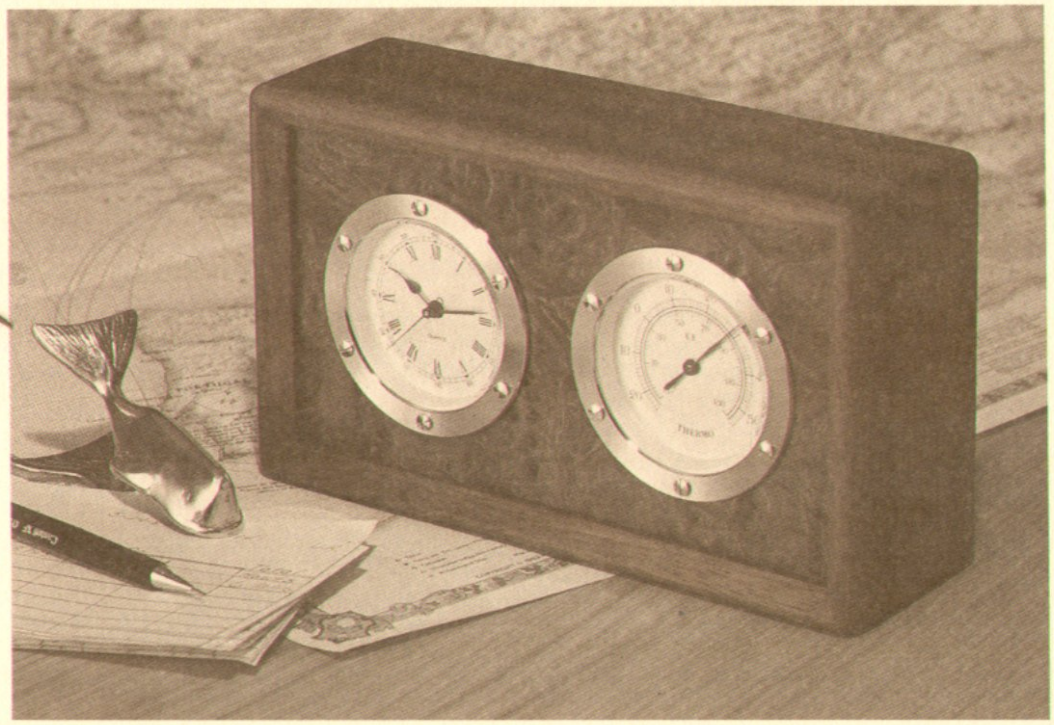

Drilling large holes can be a real hassle if you don't have the right size bit. This was the biggest problem we faced when we decided to build the desk clock shown at right. The clock movement and the thermometer are twist-in instruments that require 2⅞"-diameter holes that must fit right on the money.

The tool needed to drill this size hole is an adjustable circle cutter, see Fig. 2. These cutters can be adjusted to drill holes up to 4½" in diameter. And most important, they can be adjusted in small increments to produce just the right fit.

However, before you can use the circle cutter you should have the clock and thermometer in hand so the exact size of the holes can be determined.

THE PANELS

The desk clock is basically a mitered frame that holds two panels, refer to Fig. 7. Although ¾" hardwood plywood could be used for the panels, I thought this would be a good opportunity to use a nice burl veneer.

I bought a flexible veneer that's very easy to apply — it can be cut with a scissors, applied with contact cement, and requires no clamping . . . my kind of veneer. (See Sources, page 24.)

CUT PANELS. The first step is to cut two ¾" particle board panels to size, see Fig. 1. Then cut the veneer about 1" larger in both dimensions than the panel.

APPLY VENEER. To apply the veneer, put a thin layer of contact cement on both the veneer and the particle board panels.

Shop Note: To apply an even layer of contact cement, cut a 3" length off an inexpensive foam paint roller and use it to roll out the cement.

When the contact cement is dry to the touch, roll the veneer onto the particle board so it overhangs all four edges, see Fig. 1. Then roll it smooth with a veneer roller or a large dowel.

After both panels are veneered, trim the veneer overhanging the edge of the panel with an X-acto knife.

DRILL HOLES

Now the holes can be drilled for the clock and thermometer. The instruments we chose for this project (see Sources, page 24) require a hole with a shouldered edge. (The shoulder is for the mounting ring that actually holds the instruments in place, refer to Fig. 7.)

To make this shouldered hole, first mark the center point of the holes on the front panel, see Fig. 1. Then set the diameter of the adjustable circle cutter to the diameter of the mounting ring, and make a trial cut in a piece of scrap.

Note: These circle cutters are a little dangerous to use because the adjustable arm is difficult to see when it's rotating. Don't hold the workpiece with your hands. Clamp it to the drill press table and keep your hands out of the way, see Fig. 2.

FIRST CUT. Sneak up on the diameter of the cut until the ring fits tight in the hole. (Note: The edges of these rings are

FIGURE 1

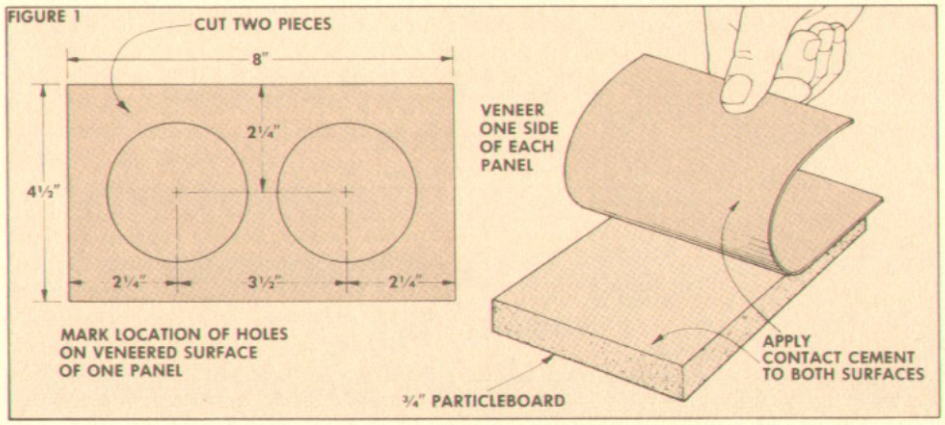

FIGURE 2

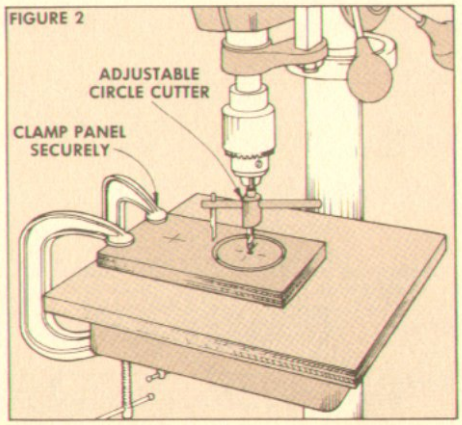

tapered. Drill the hole to fit the smallest diameter so the rings fit tight in the holes.)

When the diameter is correct on the trial piece, set the drill press to cut a depth of ⅜" and drill the holes on the veneered panels, see Step 1 in Fig. 3.

SECOND CUT. For the second cut, reset the diameter of the circle cutter ½" narrower than the first cut, and drill through the panel until the pilot bit breaks through to the other side, see Step 2 in Fig. 3. Then flip the panel over, and complete the cut, see Step 3.

ROUT FLAT. Once the hole is cut, smooth the shoulder with a router and a ¼" bit, see Step 4 in Fig. 3. Then finish sand both veneered panels.

THE FRAME

The clock's frame is constructed with ½"-thick stock that's joined with mitered corners. To make the frame, cut two 16"-long pieces 2¾" wide, see Fig. 4.

CUT GROOVES. Two grooves are cut on these pieces to hold the veneered panels. I cut these grooves using a ½" straight bit on the router table. (I used a ½" bit so I could sneak up on the width of the groove to get a good tight fit with veneered panels. The same cuts can be made with a dado blade on the table saw.)

For the first pass set the depth of cut to ¼", and position the fence to cut a groove ⅜" from the edge of the piece, see Fig. 4. Make the first pass on each piece, then flip it so the opposite edge is against the fence, and make a second cut.

To widen these grooves, move the fence away from the bit and make successive passes until the width of the grooves matches the thickness of the panels.

MITER FRAME. Next, cut a long and short side to rough length from each 16"-long piece, and miter one end of each piece.

Then using the panels as guides (see Fig. 5), mark where the second miter is to be cut. Sneak up on these miters until each piece is cut to proper size. Then bevel the edge of each piece, see Fig. 6.

ASSEMBLY. Rather than trying to glue all these pieces together at once, I glued the two veneered panels between the two end pieces first. (Carefully line up the corners of the panels with the miters.) When the glue is dry, remove the clamps and glue the top and bottom pieces to the panels to complete the case.

Finally, all the outside corners of the frame are rounded on the router table with a ¼" rounding-over bit. Then I sanded the case smooth, and finished it with two coats of Tung Oil Varnish.

MOUNT THE CLOCK. To mount the clock and thermometer, the tapered mounting ring must be driven to the bottom of the shouldered hole, see Fig. 7. Then the instruments are mounted with a "turn and click" movement.

FIGURE 3

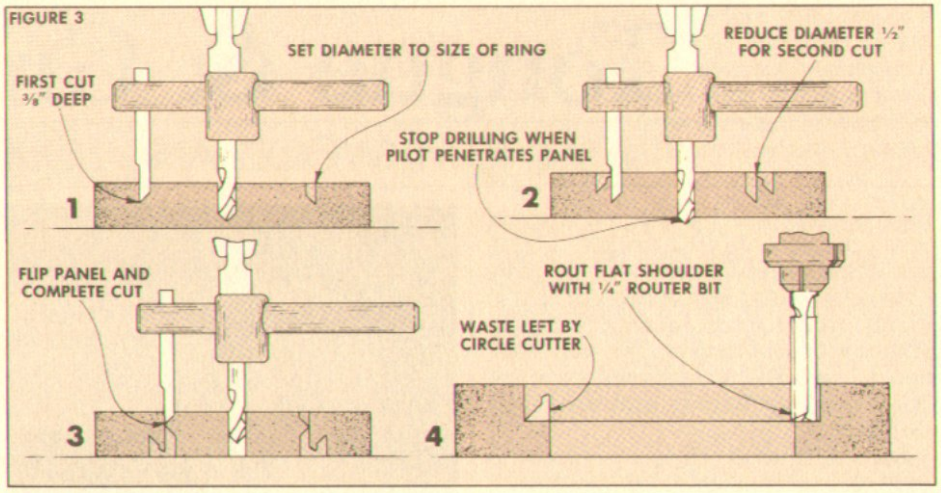

FIGURE 4

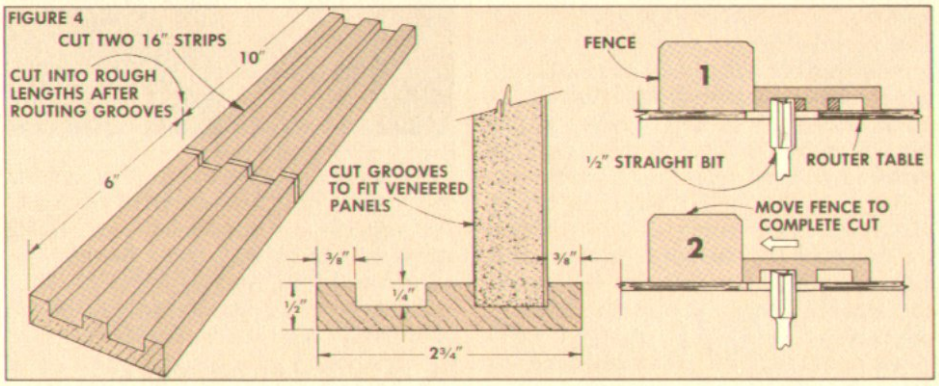

FIGURE 5

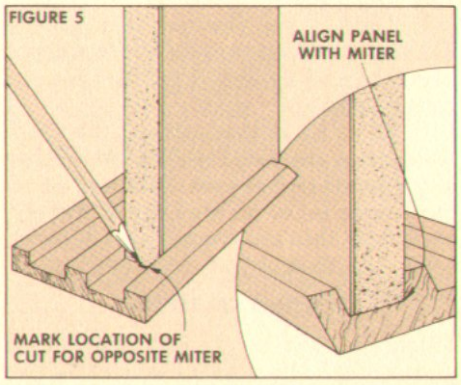

FIGURE 6

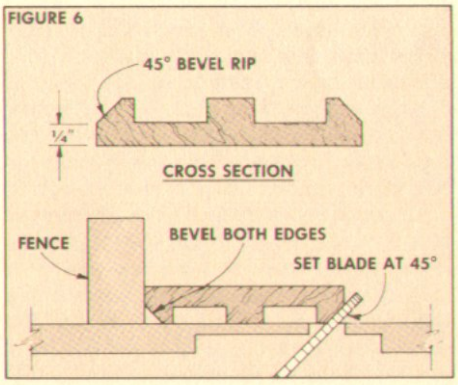

FIGURE 7

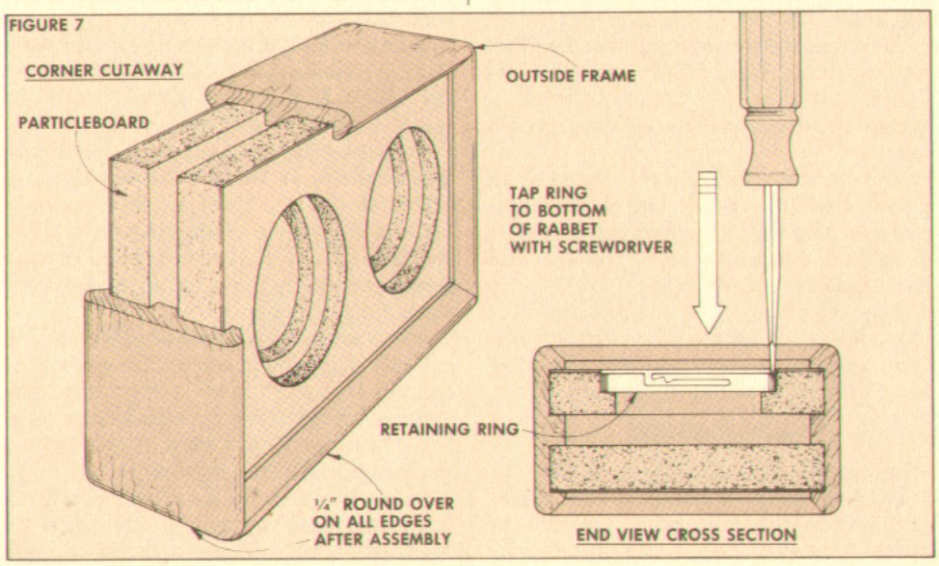

Tongue & Groove

JOINING PLYWOOD AND SOLID WOOD

Why is it that I feel a little guilty every time I use plywood for a project? I think part of the problem is that over the years I've been sort of programmed to think that quality cabinet work can only be accomplished with solid lumber. The mere mention of plywood is supposed to spark visions of dog houses and basement shelving.

But the truth is, cabinet grade hardwood plywood is anything but "dog house" material. Not only is it flat, it's also available in wide sheets (so you don't have to glue up a lot of stock to make a wide panel), and it's dimensionally stable. It can also be quite attractive. In fact, hardwood plywood is one of the finest examples of book matched veneering you'll find anywhere.

But with all of its attributes, the beauty of a plywood panel is only skin deep. This is the cause for the one major problem that arises whenever plywood is used: covering the exposed internal plys on the edges of the panel.

IRON-ON TAPE. One of the easiest ways to cover the edges is to use iron-on veneer tape. (This tape was used on the front edge of the shelves in the Wall Unit.)

Veneer tape is simply a thin piece of veneer with a heat sensitive adhesive backing that's activated by ironing the tape on the plywood edge. (See *Woodsmith* No. 22 for tips on using veneer tape.)

SOLID-WOOD STRIP. Although veneer tape is easy to use, it limits you to a square edge. If you want to form a rounded or molded edge, the only answer is to attach a solid-wood strip to the edge of the plywood. Then once the solid-wood edging is applied, it can be machined to any profile you want.

Although solid-wood strips can be glued directly to the edge of the plywood using a simple butt joint, I've found it's better to attach the edging with a tongue and groove joint.

This joint helps align the surfaces of the plywood and the wood strip while gluing and clamping which minimizes the amount of sanding needed to bring the two surfaces flush with each other.

Also, the shape of the tongue and groove joint increases the amount of gluing surface between the plywood and the solid-wood strip, and strengthens the joint.

APPLICATIONS

What all this is leading up to is the combination of using plywood and solid wood, and joining the two with tongue and groove joinery.

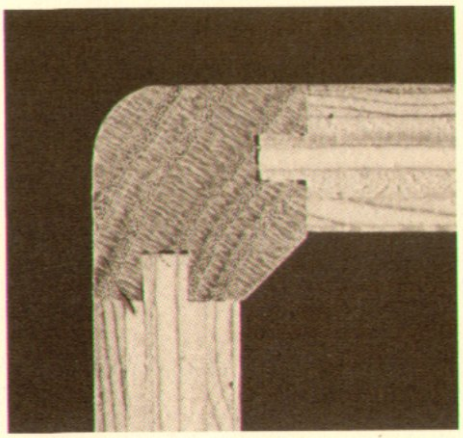

We used this combination in several ways on the Wall Unit shown in this issue. For example, we used solid-wood edging strips on the cabinet doors because we wanted to round over the edges.

On the cabinets themselves, we added solid-wood strips that were thicker than the plywood to give the cabinets a more substantial look.

And one of the most intriguing applications was using a solid-wood strip to make the corner joints on all the cabinets, see photo above.

In all of these applications, the solid-wood strips are joined to the plywood with a tongue and groove joint. And in all cases, the tongue is cut on the edge of the plywood first, then the grooves are cut on the solid wood pieces.

CHOICE OF TOOLS

Cutting a tongue on the edge of a piece of plywood is really a matter of cutting two rabbets — one on each face.

TABLE SAW vs. ROUTER. Normally, when cutting rabbets in solid wood I cut them on the table saw. But when working with plywood, I always use a router.

Why the different approaches? It has to do with the smoothness of cut when cutting across the grain. Even a carbide-tipped blade or a plywood blade tends to splinter the face veneer of plywood when cutting across the grain. But a router makes very clean cross-grain cuts.

ROUTER TABLE. Although rabbets can be cut with a hand-held router, the workpiece has to be clamped down to make the cuts, and the clamps usually get in the way. Also a rabbet bit with pilot must be used which limits the size of the rabbet.

Instead, I use a router table, see Fig. 2. No clamps are needed so it's easier to maneuver the workpiece to make good clean cuts. Also, a straight bit can be used with the router table's fence so the rabbet can be any size you want, see Fig. 1.

CARBIDE-TIPPED BIT. As for the choice of bits, I like to use a carbide-tipped straight bit that's slightly larger than the width of the rabbet. For example, use a ⅜" straight bit to cut a ¼"-wide rabbet, refer to Fig. 1. (There seems to be less strain on the bit when it's slightly larger than the width of cut.)

CUTTING THE TONGUES

Before the tongues can be cut, cut the plywood to size. (All of the projects shown in this issue require ¼"-long tongues. So add ¼" to any edge that will have a tongue, and cut the plywood to final size.)

SET THE HEIGHT. Now, to cut the tongues, set the height of the bit on the router table. This requires a little planning ahead. It's best to set the height so when both rabbets are cut, the remaining tongue is just *slightly less* than ¼" thick.

This way, when the groove is cut, it can be made in just two passes on the table saw using a blade that cuts a ⅛"-wide kerf, refer to Fig. 7. (If the tongue is thicker than ¼", the groove would require three passes. It's not a big deal, but two passes saves time and energy.)

SET WIDTH OF CUT. Next, set the router table's fence for the length of the tongue, see Fig. 1. (In almost all cases I use a ¼"-long tongue.)

TRIAL CUT. Once the router table is set up, make a trial cut on a piece of scrap to check the settings. Make the first pass to cut a rabbet on one face of the plywood, then flip the piece over to cut an identical rabbet on the other face, see Fig. 3.

CHECK DEPTH OF CUT. After each pass, check the rabbet to see if the depth of cut has changed. This can be a big problem with some routers — after a few passes the router bit tends to pull out of the collet and cuts deeper into the wood.

SECOND PASS. Although the first two rabbets technically form the tongue, I make another set of "clean-up" passes over each rabbet. This time I press down firmly on the plywood to make sure a smooth cut is made for the entire length of the piece, see Fig. 2.

These second passes may sound like a waste of time, but they ensure a clean, even cut — especially around knots in the inner cores of the plywood. (All it takes is one little spot to really goof things up during the glue-up stage.)

CHECK WITH TEST GROOVE. One advan-

tage of using the router table to cut the tongue is that the table saw is free to cut a test groove. I use the procedure described below to cut a groove in a trial piece.

Then I run this trial groove over all the tongues to see if any tongues are too tight, see Fig. 4. If there are any problem areas, the router table is still set up so I run the plywood through again, pressing a little harder to trim the tongue to proper size.

CUTTING THE GROOVES

After the tongues are cut on the edges of the plywood, the grooves can be cut in the edging pieces. However, there are two different approaches for cutting the grooves depending on whether the groove is centered on the edging piece or off-center.

A centered groove is needed when both faces of the edging strip are flush with both faces of the plywood, see Fig. 8. An off-center groove is needed when only one face of the strip is flush with the plywood. (Off-center grooves are discussed later in this article.)

CUT STRIPS TO SIZE. Before cutting the grooves, the edging strips have to be cut to size. First, cut enough stock to rough length (about 1" longer than needed) for all the edging strips. Then rip the strips to width. (Also, cut one or two extra strips to be used for trial cuts.)

THICKNESS. Before the grooves can be cut, the thickness of the strips should be checked. The problem here is that most of the ¾" hardwood plywood I've run across is slightly less than ¾" thick. And to add to the problem, most solid hardwood lumber is 13/16" thick. That extra 1/16" doesn't seem like much — but it can take forever to sand it off.

So, I trim the edging pieces down so they're only 1/32" more than the thickness of the plywood, see Fig. 5. I know this sounds like splitting hairs, but it does make things easier later.

SET UP FOR GROOVES. After the edging strips are cut to rough size, the table saw is set up to cut the grooves. Since these small strips frequently warp when they're cut to size, I use a feather board to push them tight against the fence so the grooves are cut in exactly the same position on every piece, see Fig. 6.

There are several ways to go about cutting grooves. I like to cut them on a table saw using a rip blade, making two cuts to form the groove, as shown in Figs. 7 and 8.

Although a dado head can be used to cut the groove in one pass, it's difficult to set up the cut so the groove is exactly centered. I like to use a two-cut method with a rip blade, which automatically centers the groove.

DEPTH OF CUT. First set the depth of cut so the groove will be just slightly deeper than the tongue to allow a relief for excess glue. (This is shown in the photo.)

SET FENCE. Next, you have to set the distance between the fence and the blade to cut a centered groove. Rather than using a ruler to set the fence, I use one of the extra strips as a trial piece and sneak up on the cuts.

To do this, set the fence so the blade cuts near the middle of the trial piece, see Fig. 7. Make a pass over the blade, then rotate the piece so the opposite face is against the fence, and make another pass.

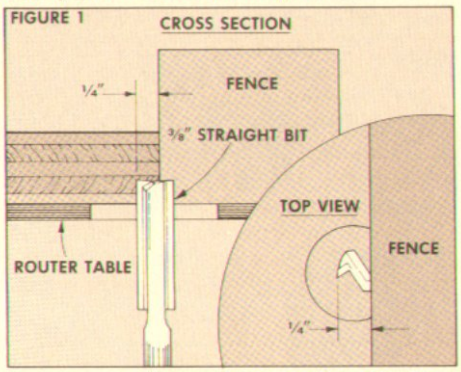

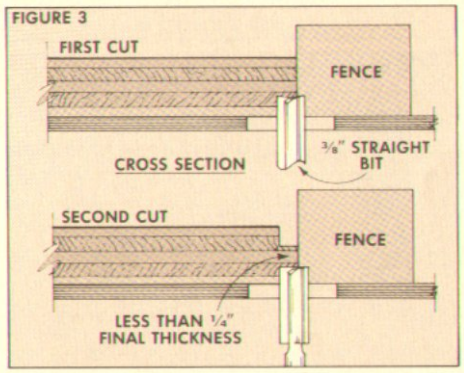

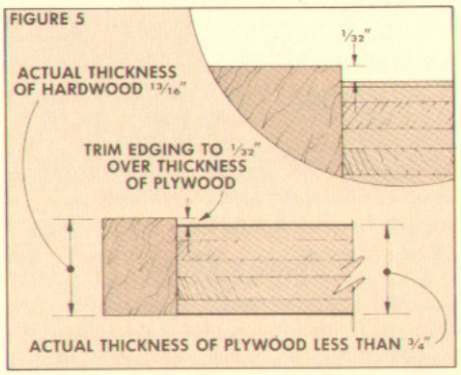

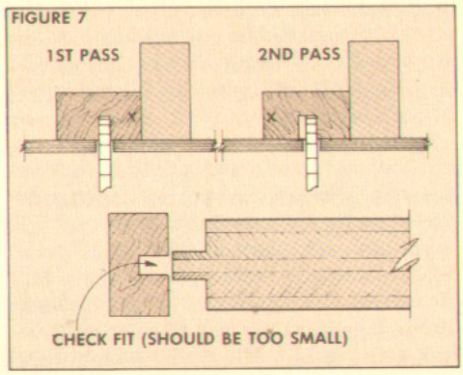

This two-cut procedure will produce a groove that's exactly centered on the thickness of the strip, but slightly narrower than needed. Now it's just a matter of moving the fence a smidgen closer to the blade, and making another set of passes, see Fig. 8.

Continue to sneak up like this until the groove fits with a loose friction fit over the tongue. (You don't want it too tight, because when the glue is applied, both the tongue and the groove will swell slightly.)

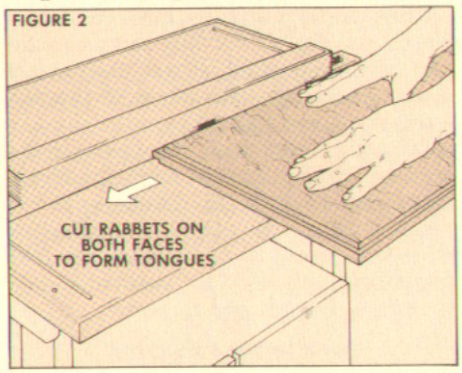

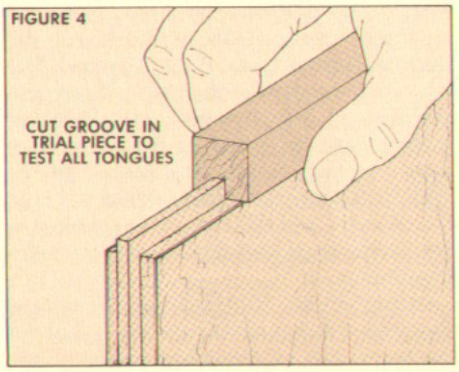

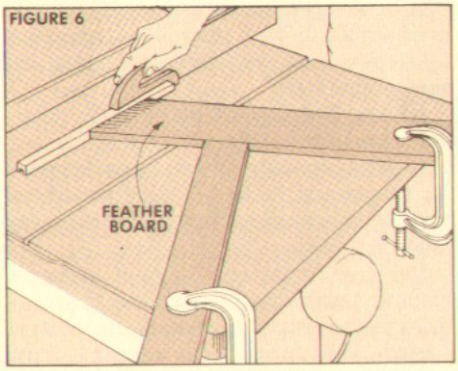

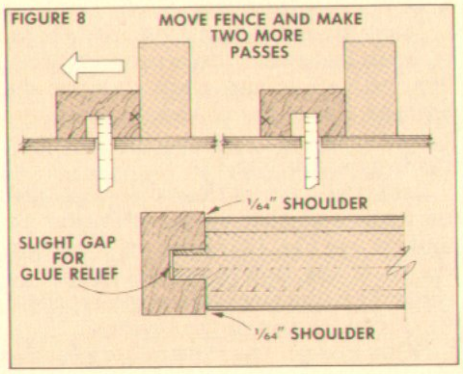

MITERING TO LENGTH

After the grooves are cut in the edging strips, the strips are cut to length and mounted to the plywood. In most cases you'll want to miter the strips (to hide the grooves), and this is, once again, a matter of sneaking up on the cuts.

First, attach an auxiliary fence to the miter gauge (to support the piece all the way to the blade) and miter only one end of each piece.

Then as the pieces are mitered to final length (see Fig. 9), cut only two pieces for each plywood panel. These two pieces should be for opposite edges of the plywood panel, see Fig. 10.

Glue and clamp these two pieces to the plywood, taking care to align the inside miter corners with the shoulders of the tongues. When the glue is dry, trim the other two pieces to fit between the first two mitered pieces. This ensures a good snug fit at the mitered corners.

OFF-CENTER GROOVES

That's how edging strips are made and mounted when both faces of the strip are flush with both faces of the plywood. But when only one face of the strip is flush with the face of the plywood, an off-center groove must be cut. (Off-center grooves were required on several pieces on the Wall Unit: the extra-thick edging strips on the cabinets and shelves, and also the corner strips used to join the cabinet sides together.)

SET-UP CUTS. Cutting an off-center groove is still done with two cuts — but not the same way as described above. When cutting an off-center groove, you have to make both cuts with the *same edge* against the fence. And you start by making the second cut first.

I know that doesn't make much sense, but it has to do with sneaking up on the cut. You could measure the distance between the tongue and the face of the plywood and try to duplicate this distance between the fence and blade.

But even if you get the right measurement and make the cut, you can't test the fit on the tongue until after the second cut is made. And to make the second cut you have to move the fence.

To get around this problem, use a piece of scrap and make the second cut first. That is, clear enough waste away on the opposite side of the groove, so when you make the first cut, you can test the fit on the tongue, see Fig. 11.

After the waste is cleared away, adjust the fence to sneak up on the setting for the first cut, see Fig. 12. As you get close, test the fit of the groove on the tongue. It should fit so the face of the edging is about 1/64" above the face of the plywood.

When you get the right setting for the first cut, set up the feather board (see Fig. 6), and make the cuts on each piece. Also make this cut on a second scrap piece.

Then use this second scrap piece to set the fence for the second cut. Again, sneak up on this cut so the groove fits with a loose friction fit on the tongue.

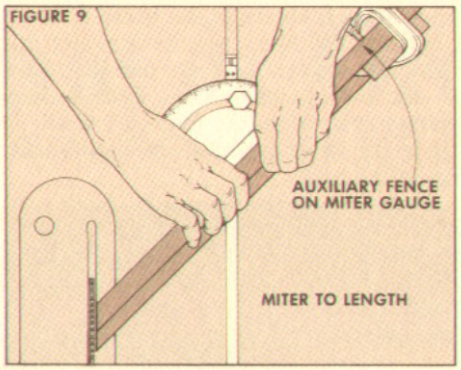

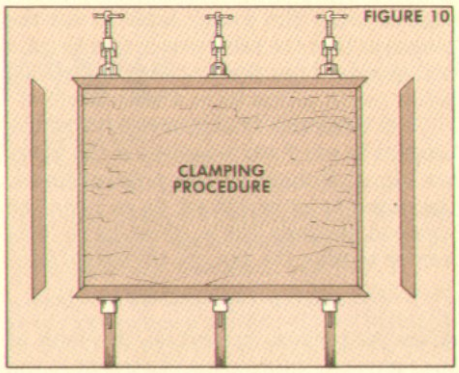

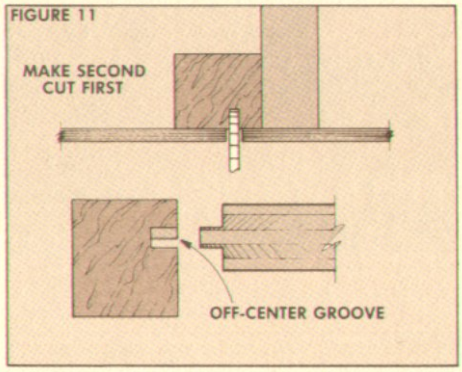

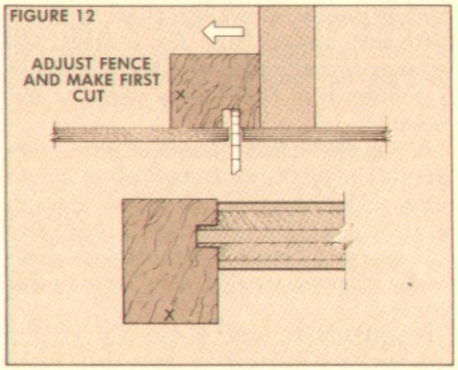

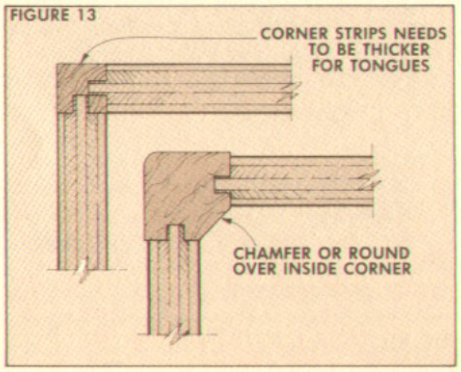

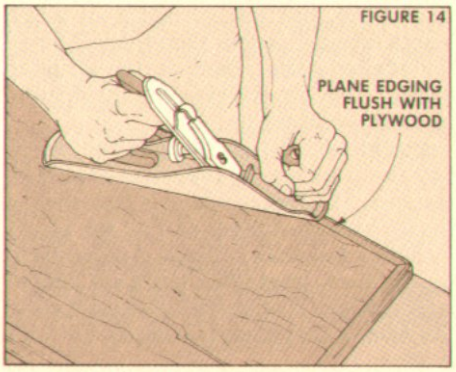

CORNER STRIPS

One of the unique applications of this type of joinery is using a solid-wood corner strip to join the plywood sides of a cabinet.

To make this joint on 3/4" plywood, the corner strip should be at least 1" x 1" so the grooves don't intersect, refer to Fig. 13. (For the Wall Unit, we used 5/4 oak which is 1 1/16" thick.)

Cut the corner strips so they're square and then cut grooves on adjacent faces of the strip. (Follow the same procedure discussed above for off-center grooves.)

The only problem is dealing with the inside corner. To reduce its intrusion into the cabinet, the inside corner can be chamfered off — a simple 45° cut on the table saw, see Fig. 13. Or, if you want to get fancy, the inside corner can be rounded with a cove bit on a router table.

After the grooves and chamfer are cut, the strips can be glued to the plywood pieces to assemble the cabinet. Then after assembly, round over the outside corners with a 1/4" corner-round bit.

SMOOTHING THE SURFACES

On all these applications, the key is to get the surface of the edging strip about 1/64" above the surface of the plywood.

This 1/64" may seem like splitting hairs, but it's just enough to take care of any waviness in the plywood, and to make sure the solid wood is the part that needs sanding, not the face veneer of the plywood.

To get the solid wood flush with the plywood, I use a jack plane. Set the plane iron for a very, very light cut and plane the surface of the wood strip flush with the plywood. (See *Woodsmith* No. 23 for more information on working with hand planes.) When the wood strip is flush, sand the entire surface with an orbital sander to remove any scratches.

Talking Shop

AN OPEN FORUM FOR COMMENTS AND QUESTIONS

NEW NAMES IN POWER EQUIPMENT

After spending 30 years establishing themselves as a source for industrial quality woodworking equipment, Rockwell has decided to get out of the woodworking business completely.

Rockwell started the process back in October of 1980, when they sold their Portable Tool Division. Then in April of this year, they took the last step by selling their Power Tool Division, ending a 30-year affair with the woodworking industry.

Both the portable and stationary tool divisions are now set up as new, completely separate companies. The Portable Tool Division (which produced routers, drills, sanders, etc.) is now Porter-Cable. And the Stationary Tool Division (which produced table saws, band saws, jointers, drill presses, etc.) is now Delta International.

Although the names Porter-Cable and Delta may be new to many (younger) woodworkers, they are, in fact, the names of the original tool companies purchased by Rockwell 30 to 40 years ago.

PORTER-CABLE. Porter-Cable was first established around 1906 in Syracuse, New York, and had been in the portable tool business for 55 years by the time they were purchased by Rockwell in 1961.

Initially after Rockwell had purchased Porter-Cable, both names were used on the portable tools to capitalize on the reputation Porter-Cable had established. But by the late 1960s, the Porter-Cable name was dropped, and the entire line of portable tools became known as Rockwell.

Then in October of 1980, Rockwell sold its portable power tools to a company called Pentair in St. Paul, Minnesota. Pentair decided to rename its tools Porter-Cable after a market research found it still had a significant amount of name recognition left over from the 1950s.

DELTA. The name Delta originates from the Delta Specialty Company of Milwaukee, Wisconsin, that started operations in 1919 and produced stationary power tools. Then in 1945, Delta became the first of many companies that Rockwell purchased in the woodworking field. Once Delta became part of Rockwell, they became known as the Delta Power Tool Division of Rockwell until around 1956, when all references to Delta were dropped, and they simply became the Power Tool Division of Rockwell.

This is the way things stood with the stationary tools until this April, when Rockwell announced it was selling its Power Tool Division (which included all their power stationary tools) to Pentair — the same company that purchased their portable tool division 3½ years earlier.

Although Pentair now owns both Porter-Cable and Delta International, they're operating as two independent companies with two totally separate product lines.

Both companies also purchased the manufacturing facilities from Rockwell, so their tools are being made in some of the same factories (and by many of the same people) as they were under Rockwell.

One other thing that both companies have in common is that they're still using the distribution network Rockwell setup, so finding parts or service should be the same as it was under Rockwell.

FEATHER BOARDS

Whenever I'm making a piece of molding, or cutting a groove, one problem I'm constantly fighting is how to keep the workpiece tight against the fence. If the workpiece is warped at all, it pulls away from the fence, which means the position of the cut will vary along the length of the piece.

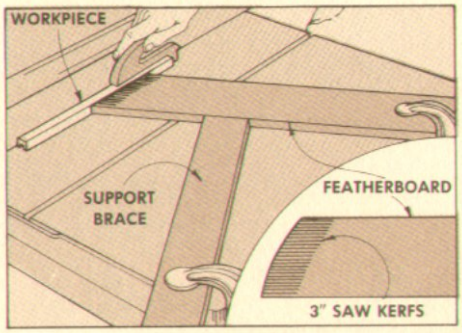

The solution is to use a device called a featherboard to hold the workpiece tight against the fence. The featherboards I use are simply pieces of scrap lumber (usually ¾" pine or fir plywood) that have fan-like fingers (feathers) on one end. These fingers act like springs to apply constant pressure against the workpiece.

To create the "feathered" end, cut a gently curved 30° angle on the end of a piece of scrap. Then using either a band saw or coping saw, make a series of 3"-long cuts about ⅛" apart.

To use the featherboard, clamp it to the table top so the fingers are tight against the workpiece. Then clamp a brace against the featherboard at a 90° angle to keep it from slipping.

To adjust the amount of pressure against the workpiece, move the brace toward or away from the featherboard. There should be enough pressure to keep the workpiece tight against the fence, yet not so much that it requires excessive force to feed the workpiece through the blade.

GLUE STAINS

Recently, after gluing up pieces of Eastern red oak, black stains have shown up in two areas: where the glue was spread out with a putty knife, and where the glue contacted the iron pipe on my pipe clamps.

Can you tell me how to avoid these black stains in the future?

Robert Kidd
Bakersfield, California

The black stains you're seeing are simply the result of a chemical reaction that occurs when certain conditions exist. This chemical reaction requires three components: water, iron, and tanin.

When gluing, water is provided by the glue, iron is provided by the pipe clamps (or the putty knife you mentioned using) and tanin is a chemical commonly present in all species of oak.

When all three components are present, a black stain is produced. In fact, years ago, permanent black ink was produced by combining extracts from oak and oak bark with iron and water.

Using a physical barrier (waxed paper) is one of the best ways to prevent a chemical reaction between the pipe clamps (iron) and the glue (water). But even using waxed paper doesn't necessarily prevent a reaction from taking place.

According to Andy Baker of the Forrest Products Laboratory, even a small amount of rust that's picked up from the top of a table saw, or from a putty knife can provide more than enough iron to cause a reaction when water is introduced.

All hardwoods have some tanin and are subject to black stains, although the highest levels are usually found in oak and hickory. Other species where tanin is poses a severe staining threat are Western Hemlock, Western Cedar, and Douglas Fir. (All of these "construction" woods will produce black stains if iron nails are used. That's why galvanized or aluminum nails are recommended.)

Luckily, the chemical reaction that creates the black stain stops as soon as the water dries out. In the case of edge gluing, the glue usually dries before the stain penetrates much deeper than the very surface of the board.

Sources

MODULAR WALL UNITS

We used quite a bit of hardware for all the various components of the Modular Wall Units. Since the wall units are modular, they can be customized to meet your individual specifications.

But customization can also change the hardware requirements. Before ordering, carefully check your plans, then refer to the List of Materials (see page 17) or to the list below to determine your hardware requirements.

Side Frames & Connector Frames

- ¼" Threaded Inserts (12 required for each unit)
- Pin Style Shelf Supports (6 required for each unit)

Combination Shelves

- Pin Style Shelf Supports (4 required per shelf)

Cabinet Shelves

- Iron On Oak Edging (one 8′ roll required per shelf)

One Base Cabinet with Doors

- (2 pr.) Pivot Door Hinges
- (1) Double Magnetic Door Catch
- (2) Oak Wire Pulls
- (10) Plastic Retainer Buttons
- (10) Pin Style Shelf Supports

One Base Cabinet with Drawers

- (2) Oak Wire Pulls
- (2 sets) 16" Drawer Slides

One Fall Front Cabinet

- (1 pr.) Pivot Door Hinges
- (1) Magnetic Catch
- (1) Oak Wire Pull
- (2) Telescopic Support Arms
- (10) Plastic Retainer Buttons
- (10) Pin Style Shelf Supports

One Hutch Cabinet with Glass Doors

- (2 pr.) Glass Door Hinges
- (1) Magnetic Catch
- (1 pr.) Magnastrike Plates
- (2) Oak Wire Pulls
- (10) Plastic Retainer Buttons
- (14) Pin Style Shelf Supports

WALL UNIT HARDWARE

Some of the individual hardware items for the Modular Wall Units can be ordered from **Woodsmith Project Supplies** using the part numbers listed below. Other parts are available from the sources listed below.

W33-733-115 (1) 8' Roll Oak Edging $3.95
W33-733-102 (1 pr.) Wooden Door Pivot Hinges $2.95
W33-1007-109 (1 pr.) Glass Door Pivot Hinges $3.75
W33-733-111 (1 pr.) Magnastrike Plts ... $2.60
W33-1004-206 (1) Magnetic Catch For Fall-Front Cabinet $1.45
W33-1007-105 (1) Chrome-Plated Telescopic Drop Leaf Support $16.95
W33-1005-215 (1) Solid Oak Wire Pull ... $2.25

DESK CLOCK/THERMOMETER

The clock and thermometer instruments we originally used for this project are no longer available. A set of similar instruments is available from the sources listed below in the Mail Order Sources. These are slightly different in appearance than those shown on page 18, but they're less expensive. They also have the added advantage of not requiring drilling a rabbeted hole which makes installation much easier. We recommend having the parts in hand before beginning the project.

FLEXIBLE VENEER

The flexible veneer we used on the front of the desk clock was Carpathian Elm Burl—an expensive veneer. This and many other flexible veneers are available from mail order sources listed below.

ADJUSTABLE CIRCLE CUTTER

These circle cutters are sometimes available at better hardware stores or building centers. If you can't find one locally, they are available from the sources listed below in the Mail Order Sources.

WOODSMITH PROJECT SUPPLIES

ORDER BY MAIL

To order by mail, use the form enclosed with a current issue. The order form includes information on handling and shipping charges and sales tax. Send your mail order to:

Woodsmith Project Supplies
P.O. Box 10350
Des Moines, IA 50306

ORDER BY PHONE

For faster service use our Toll Free order line. Phone orders can be placed Monday thru Friday, 7:00 AM to 7:00 PM Central Standard Time.

Before calling, have your VISA, MasterCard, or Discover card ready.

800-444-7002

Prices subject to change, call for current prices.

MAIL ORDER SOURCES

Similar hardware and supplies may be found in the following catalogs. Please call each company for a catalog or information.

Constantines
800–223–8087
Wall Unit Hardware, Veneer, Circle Cutter, Thermometer

Bob Morgan Woodworking
502-456-2545
Veneer

Klockit
800–556–2548
Clock Movement and Thermometer

Trendlines
800–767–9999
Circle Cutter

Woodcraft
800–225–1153
Circle Cutter

The Woodworkers' Store
800-279-4441
Wall Unit Hardware, Veneer, Circle Cutter